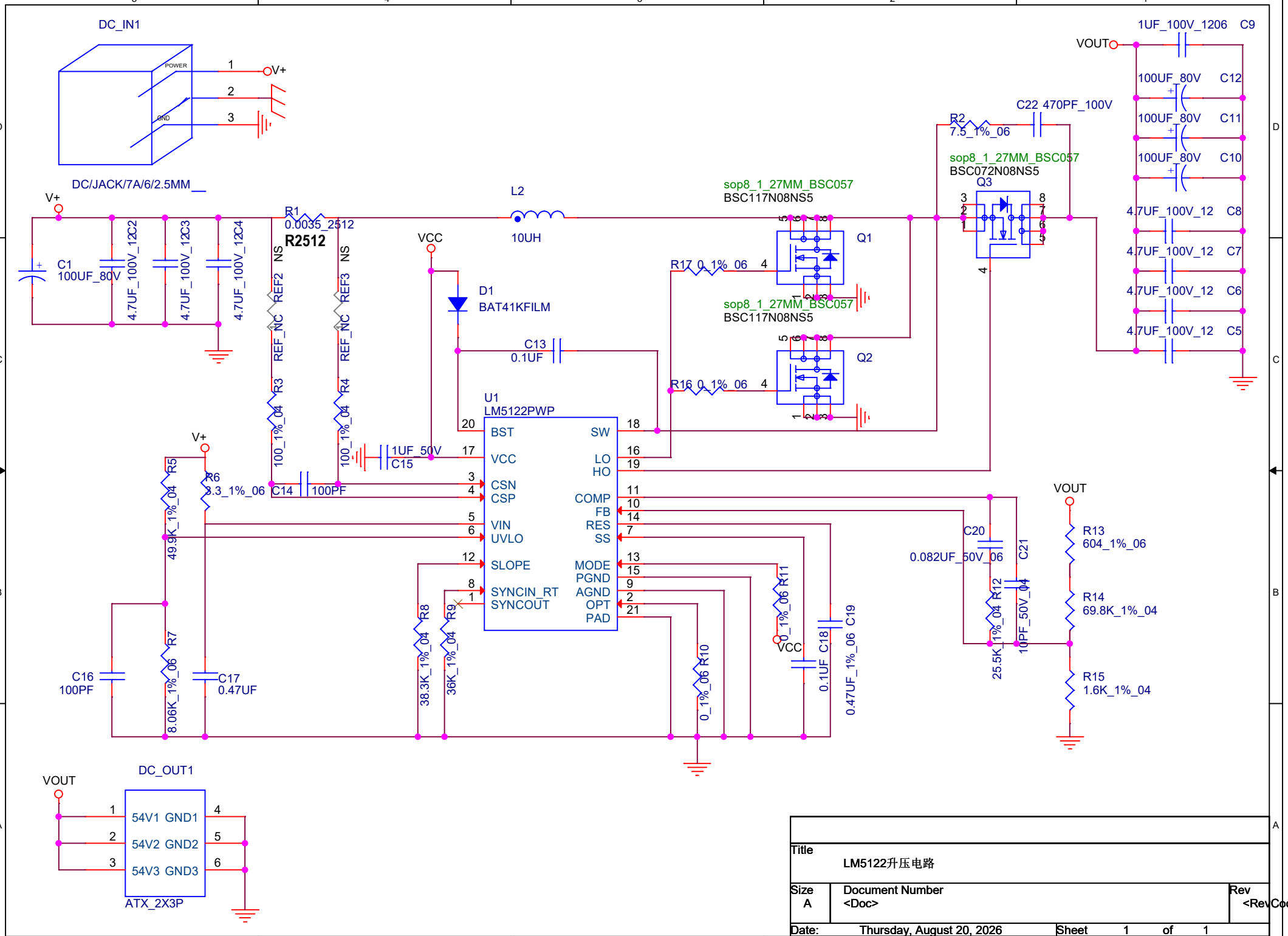

Title	LM5122升压电路	
Size A	Document Number <Doc>	Rev <RevCode>
Date: Thursday, August 20, 2026	Sheet 1 of 1	