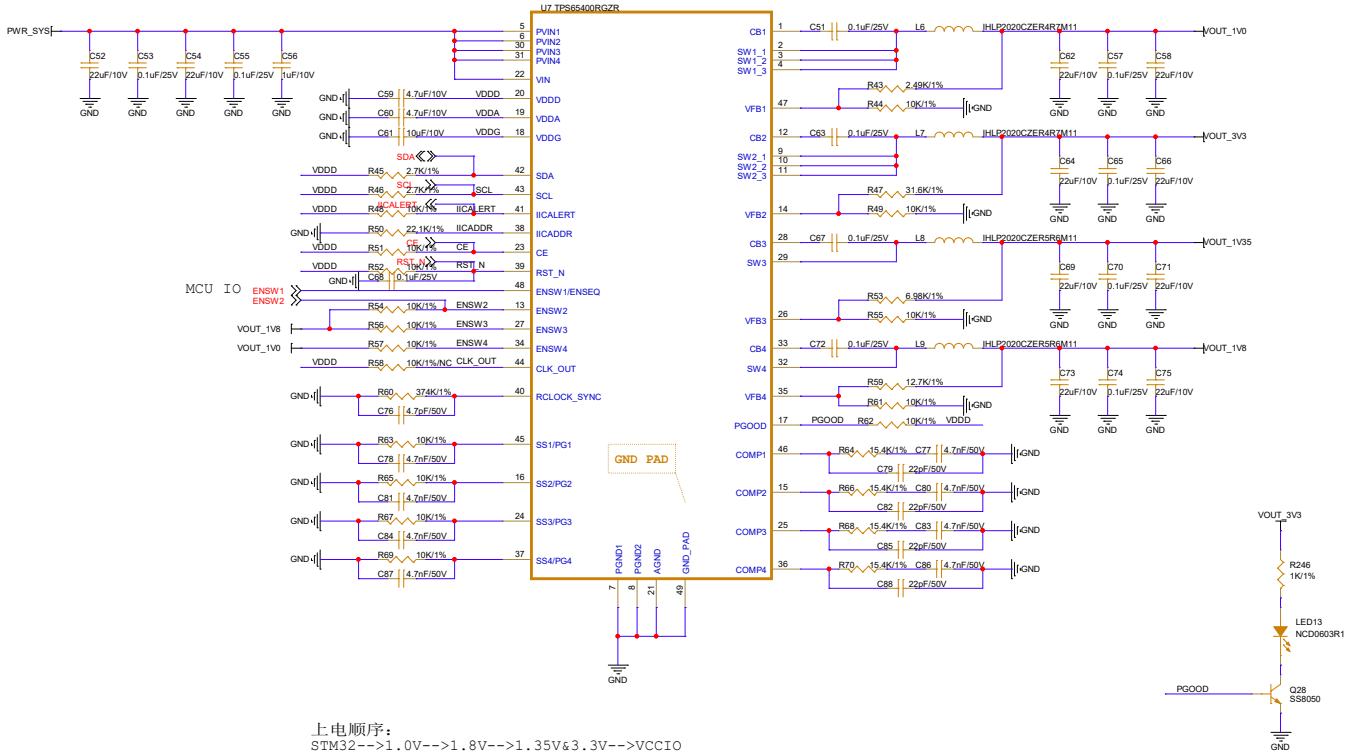

上电顺序：
STM32-->1.0V-->1.8V-->1.35V&3.3V-->VCCIO

Title	<Title>		
Size A3	Document Number <Doc>		Rev <RevCo
Date: Wednesday, April 09, 2025		Sheet 7 of 27	