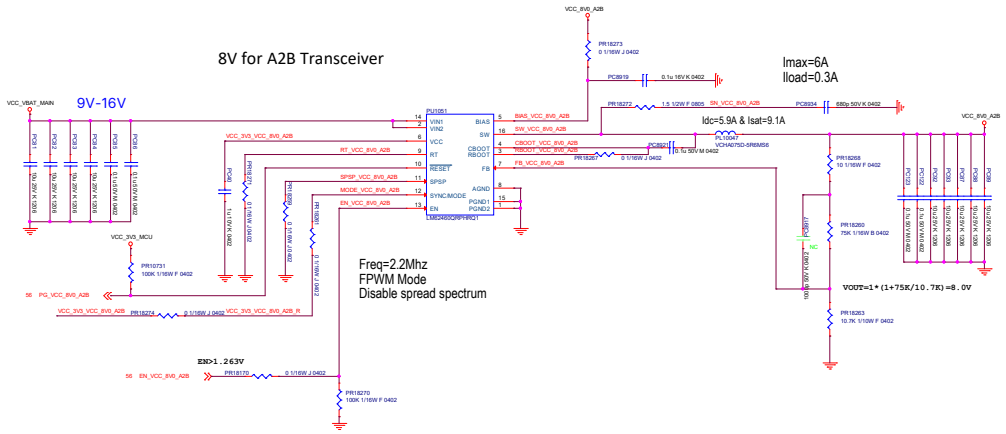

DELTA ELECTRONICS,INC.	Date: Wednesday, May 13, 2026	LY. REV: *LY Rev*	Drawn: *<Name>*	Checked	Approved	PART NO.	REV.	SHEET
THESE DRAWINGS AND SPECIFICATIONS ARE THE PROPERTY OF DELTA ELECTRONICS, INC. AND SHALL NOT BE REPRODUCED OR USED AS THE BASIS FOR THE MANUFACTURE OR SELL OF APPARATUSES OR DEVICES WITHOUT PERMISSION. Frame Name:DF-SCA2H-2R02.DSN	PWB: *<29739XXXXX.BRD>*	FILE NAME: *<29739XXXPJXX.DSN>*					
	DESCRIPTION: <Doc>			*<Checked Data>*	*<Approved Data>*	*<29734XXXXX-SC>*	*<Rev>*	93 TO 100