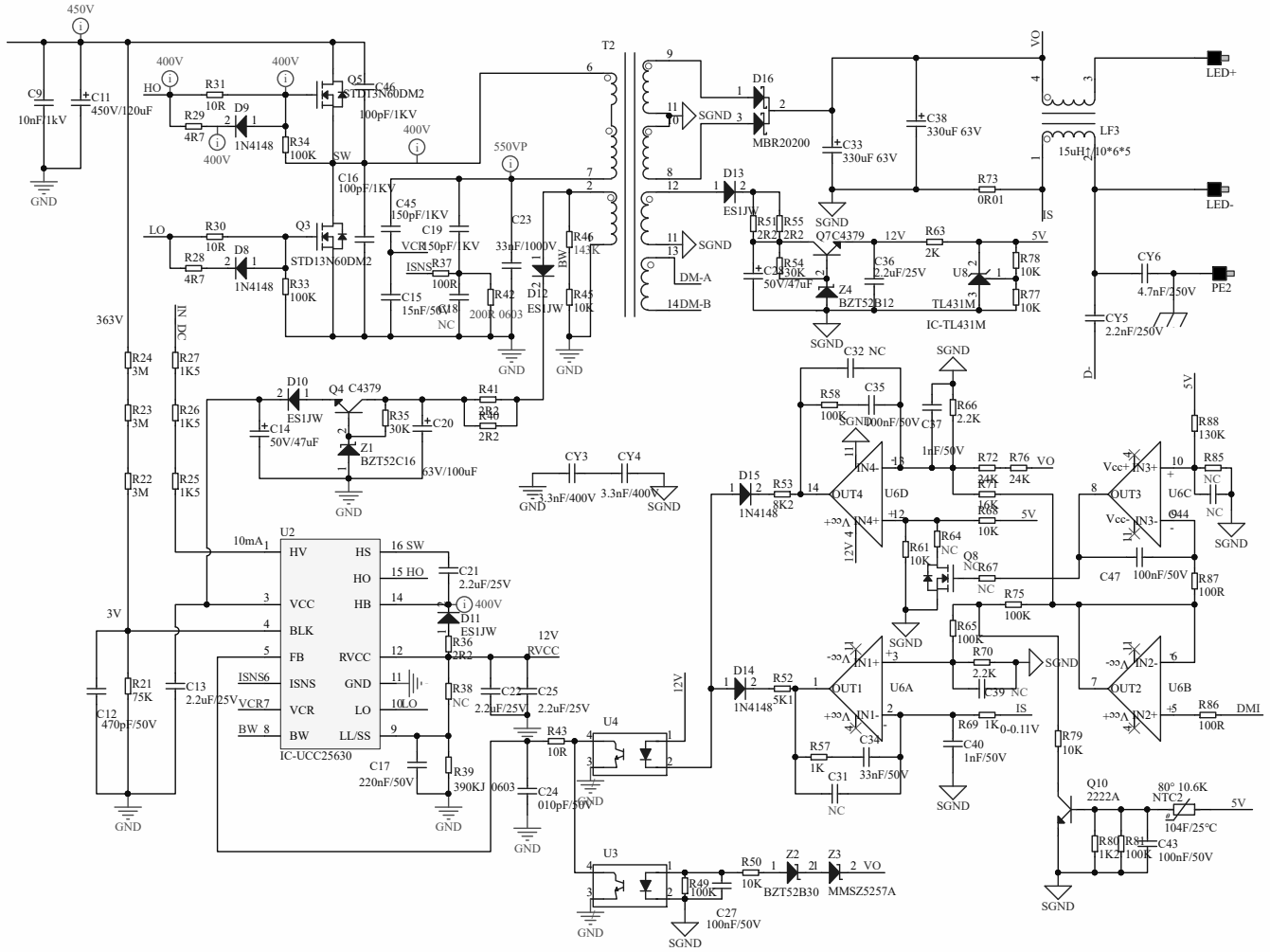
450V
C9
10nF/1kV
C11
450V/120uF
GND
400V
HO
R31
10R
R29
4R7
D9
1N4148
R34
100K
Q5
STD13N60DM2
C46
100pF/1KV
SW
C16
100pF/1KV
LO
R30
10R
R28
4R7
D8
1N4148
Q3
STD13N60DM2
R33
100K
C45
150pF/1KV
C19
150pF/1KV
VCR
ISNS
R37
100R
C15
15nF/50V
C18
NC
R42
200R 0603
C23
33uF/1000V
D12
ES1JW
R46
143K
R45
10K
550VP
T2
SGND
D16
MBR20200
D13
ES1JW
R51
2R2
R55
2R2
R54
30K
C22
50V/47uF
Q7 C4379
Z4
BZT52B12
C33
330uF 63V
C38
330uF 63V
R73
0R01
IS
12V
R63
2K
C36
2.2uF/25V
U8
TL431M
IC-TL431M
5V
R78
10K
R77
10K
VO
LED+
LED-
LF3
15uH/10*6*5
CY6
4.7nF/250V
PE2
CY5
2.2nF/250V
D-
DM-A
14DM-B
363V
IN DC
R24
3M
R23
3M
R22
3M
R27
1K5
R26
1K5
R25
1K5
D10
ES1JW
Q4 C4379
C14
50V/47uF
R35
30K
C20
63V/100uF
Z1
BZT52C16
R41
2R2
R36
2R2
CY3
3.3nF/400V
CY4
3.3nF/400V
10mA
U2
HV
VCC
BLK
FB
ISNS
VCR
BW
HS
HO
HB
RVCC
GND
LO
LL/SS
16 SW
15 HO
14
12
11
10 LO
9
IC-UCC25630
C21
2.2uF/25V
D11
ES1JW
R36
2R2
12V
RVCC
R38
NC
C22
2.2uF/25V
C25
2.2uF/25V
R39
390KJ 0603
C17
220nF/50V
C24
010pF/50V
R43
10R
3V
R21
75K
C12
470pF/50V
C13
2.2uF/25V
U4
U3
R49
100K
R50
10K
Z2
BZT52B30
Z3
MMSZ5257A
C27
100nF/50V
D15
1N4148
R53
8K2
D14
1N4148
R52
5K1
C32 NC
R58
100K
C35
100nF/50V
R66
2.2K
C37
1nF/50V
R72
24K
R76
24K
R71
16K
R68
10K
R61
10K
R64
NC
Q8
NC
R67
NC
R75
100K
R65
100K
R70
2.2K
C39 NC
R69
1K
0-0.11V
C40
1nF/50V
R57
1K
C31
NC
C34
33nF/50V
U6D
U6A
U6C
U6B
R88
130K
R85
NC
C47
100nF/50V
R87
100R
R86
100R
DMI
R79
10K
Q10
2222A
80° 10.6K
NTC2
104F/25°C
R80
1K2
R81
100K
C43
100nF/50V