B008-BAIHUB_POEM_BOARD

电源供电分类
1.POE供电与适配器供电都在电源模组上
2.POE供电为单独模组，适配器在主板上
3.POE与AC供电共存

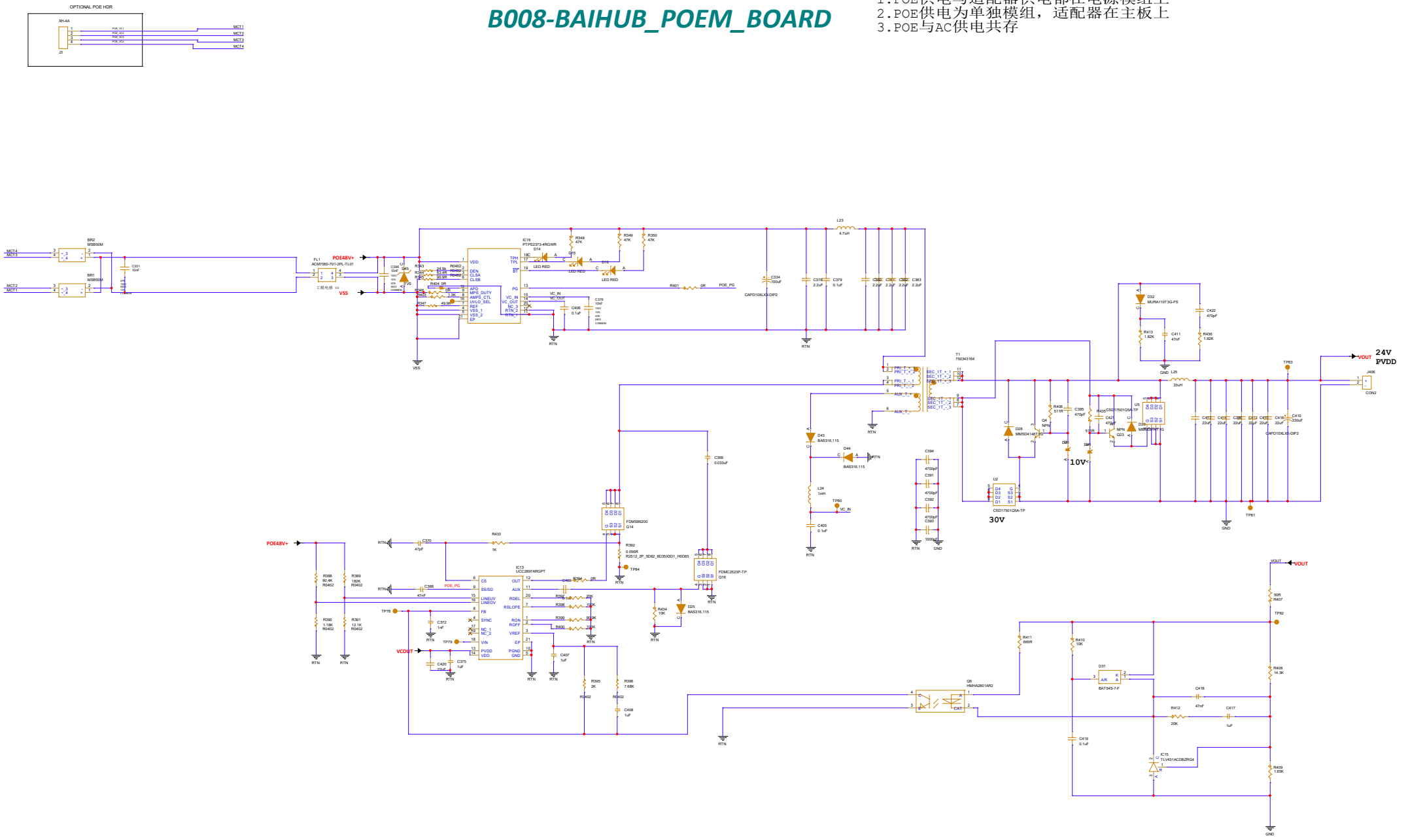

Biomatic	南京百合智声网技术有限公司 -FEEL THE DIFFERENCE-	
Designer: <Designer>	Drawing Title: <Title>	
Drawn by: <Drawn By>	Page Title: <PageTitle>	
Approved: <Approver>	Size: A1 / Document Number: <Doc>	Rev: <RevCode>
	Date: Thursday, March 26, 2026	Sheet 4 of 4