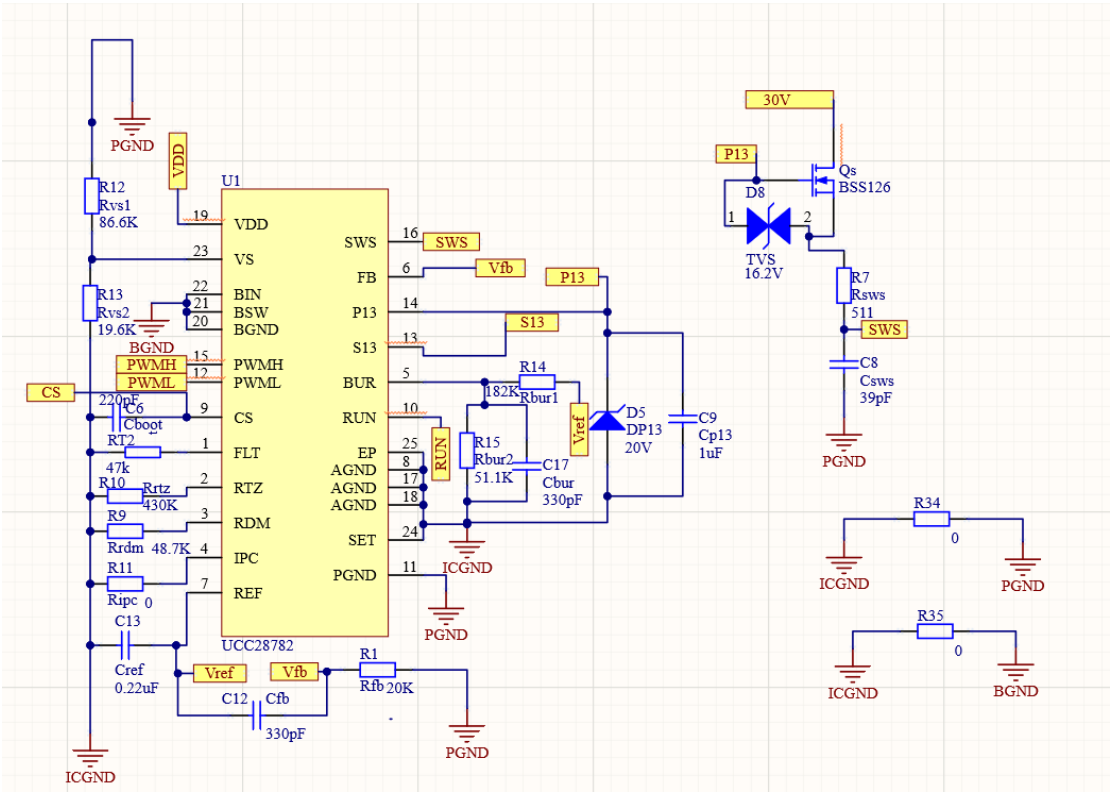

图 1.1 测试启动过程电路

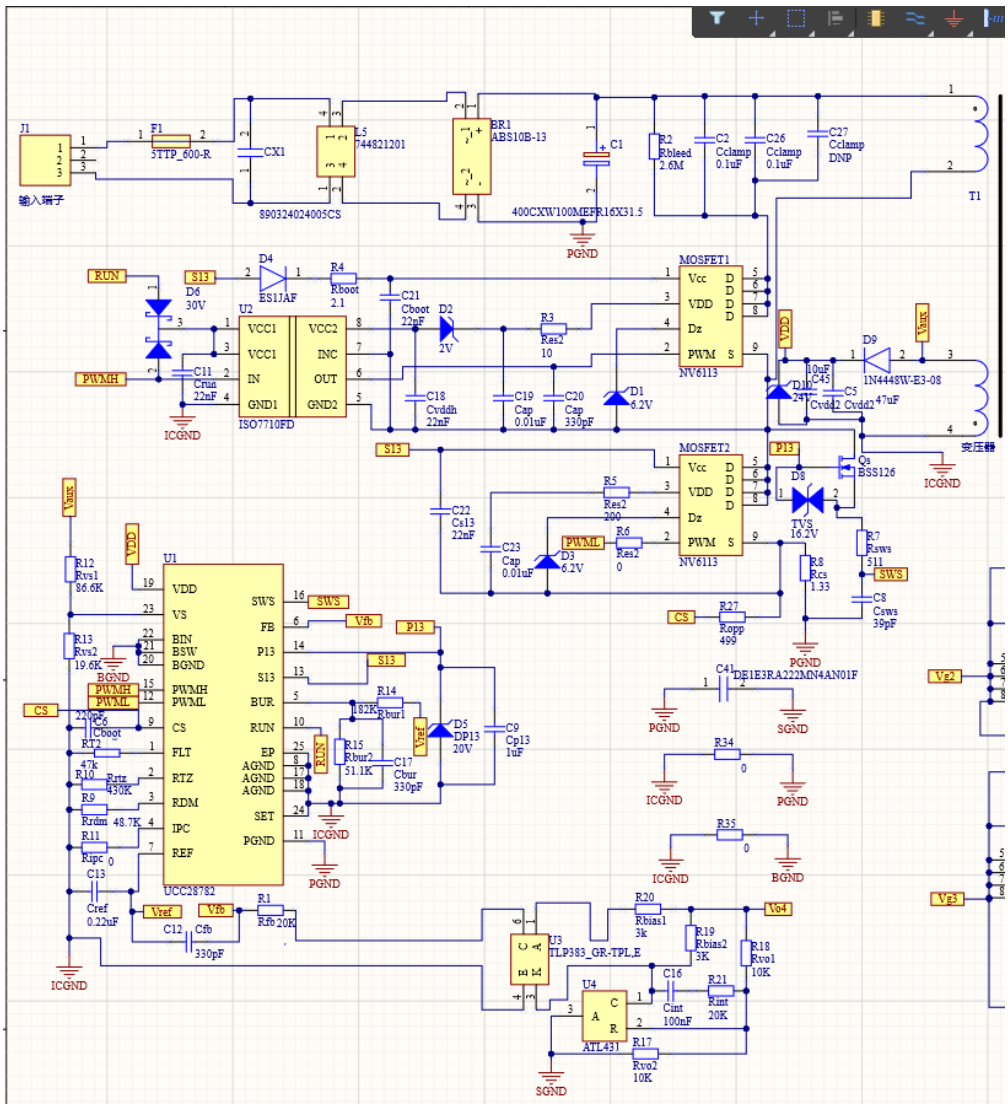
J1
输入端子
F1
5TTP_600-R
CX1
890324024005CS
L5
744821201
BR1
ABS10B-13
C1
400CXW100MEFR16X31.5
PGND
R2
Rbleed
2.6M
C2
Cclamp
0.1uF
C26
Cclamp
0.1uF
C27
Cclamp
DNP
T1
RUN
S13
D4
ES1JAF
D6
30V
R4
Rboot
2.1
C21
Cboot
22nF
D2
2V
R3
Res2
10
MOSFET1
Vcc
VDD
Dz
PWM
NV6113
PWMH
C11
Crun
22nF
U2
VCC1
IN
GND1
VCC2
INC
OUT
GND2
ISO7710FD
ICGND
C18
Cvddh
22nF
C19
Cap
0.01uF
C20
Cap
330pF
D1
6.2V
VDD
Vaux
D9
1N4448W-E3-08
D10
24V
C45
10uF
C5
Cvdd2
47uF
安压器
Q8
BSS126
MOSFET2
P13
D8
TVS
16.2V
R5
Res2
200
R6
Res2
0
PWML
D3
6.2V
C22
Cs13
22nF
C23
Cap
0.01uF
R7
Rsws
511
R8
Rcs
1.33
C8
Csws
39pF
SWS
CS
R27
Ropp
499
U1
VDD
VS
BIN
BSW
BGND
PWMH
PWML
CS
FLT
RTZ
RDM
IPC
REF
SWS
FB
P13
S13
BUR
RUN
EP
AGND
SET
PGND
UCC28782
R12
Rvs1
86.6K
R13
Rvs2
19.6K
C6
Cboot
RT2
47k
R10
Rrtz
430K
R9
Rrdm
48.7K
R11
Ripc
0
C13
Cref
0.22uF
Vfb
R14
182K
Rbur1
R15
Rbur2
51.1K
C17
Cbur
330pF
Vref
D5
DP13
20V
C9
Cp13
1uF
C41
DE1E3RA222MN4AN01F
SGND
R34
R35
Vg2
Vg3
R1
Rfb 20K
C12
Cfb
330pF
U3
TLP383_GR-TPL,E
R20
Rbias1
3k
R19
Rbias2
3K
R18
Rvo1
10K
Vo4
C16
Cint
100nF
R21
Rint
20K
U4
ATL431
R17
Rvo2
10K

图 1.2 原边总电路图