1、analog

文件: analog.kicad_sch

2、Controller

文件: Controller.kicad_sch

3、OVP

文件: OVP.kicad_sch

Sheet: /
File: BMC112A.kicad_sch

Title:

Size: A4	Date:	**Rev:**
KiCad E.D.A. 10.0.0		Id: 1/4

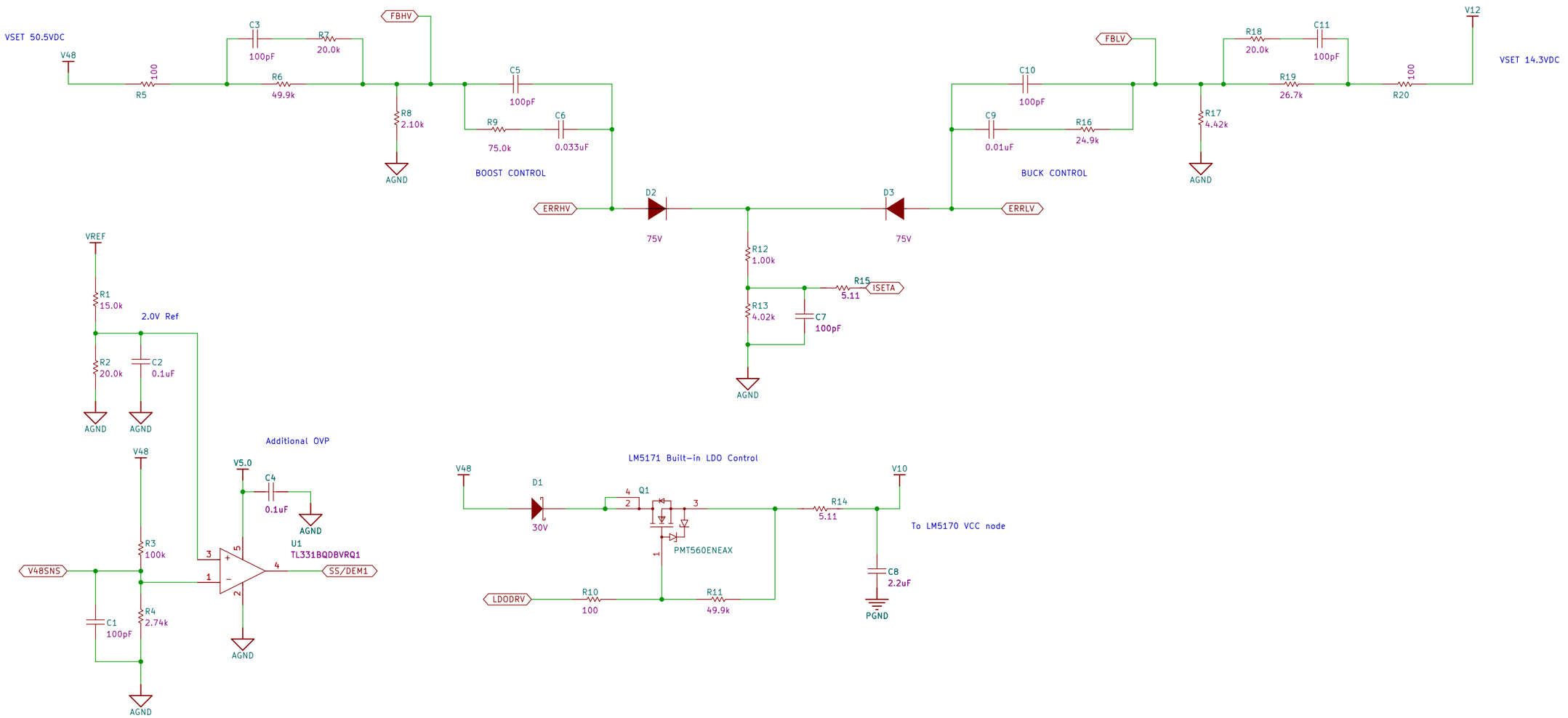

Sheet: /1. analog/
File: analog.kicad_sch

Title:

Size: A3	Date:	Rev:
KiCad E.D.A. 10.0.0		Id: 2/4

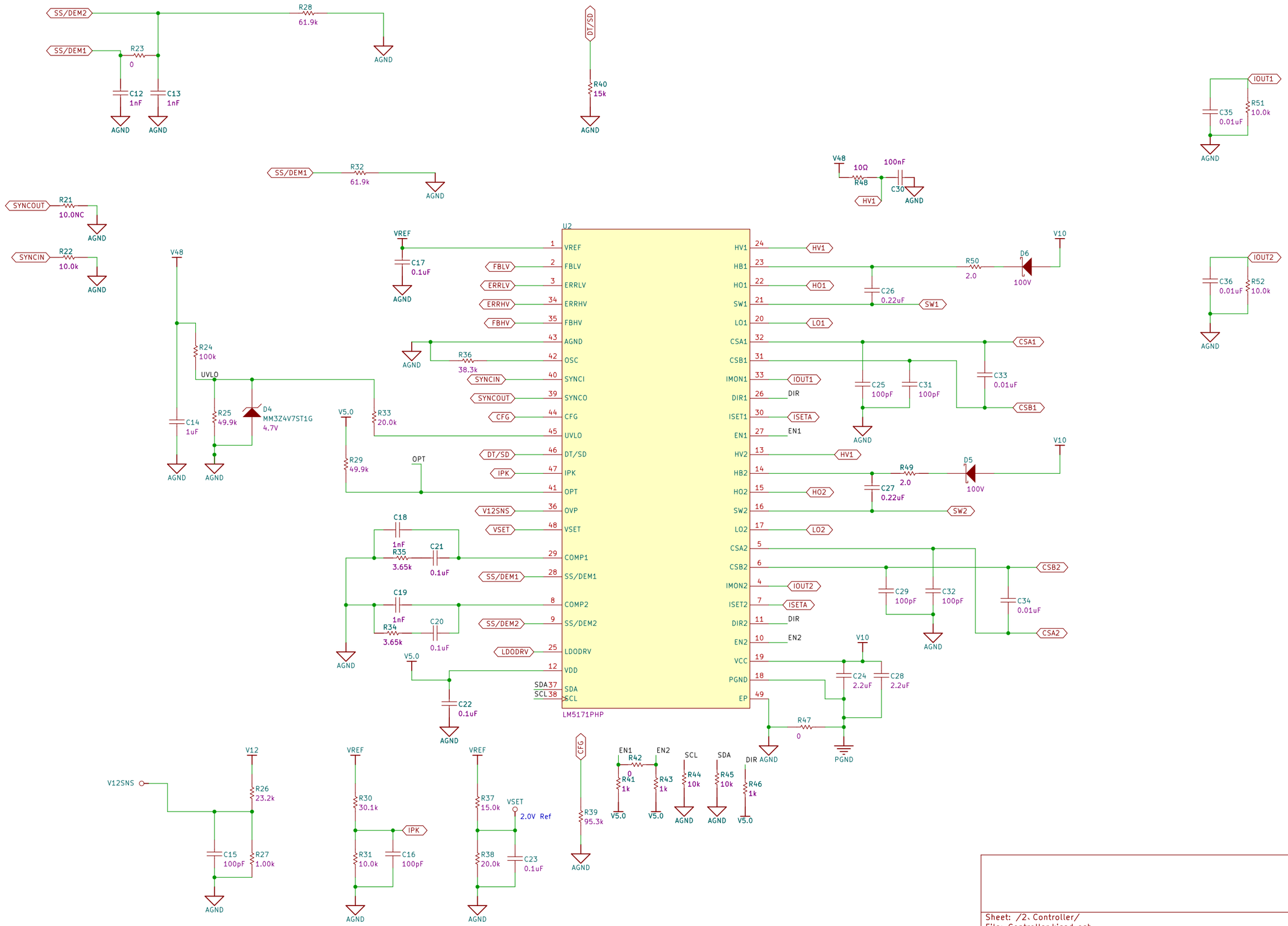

Sheet: /2. Controller/
File: Controller.kicad_sch

Title:

Size: A3	Date:	Rev:
KiCad E.D.A. 10.0.0		Id: 4/4

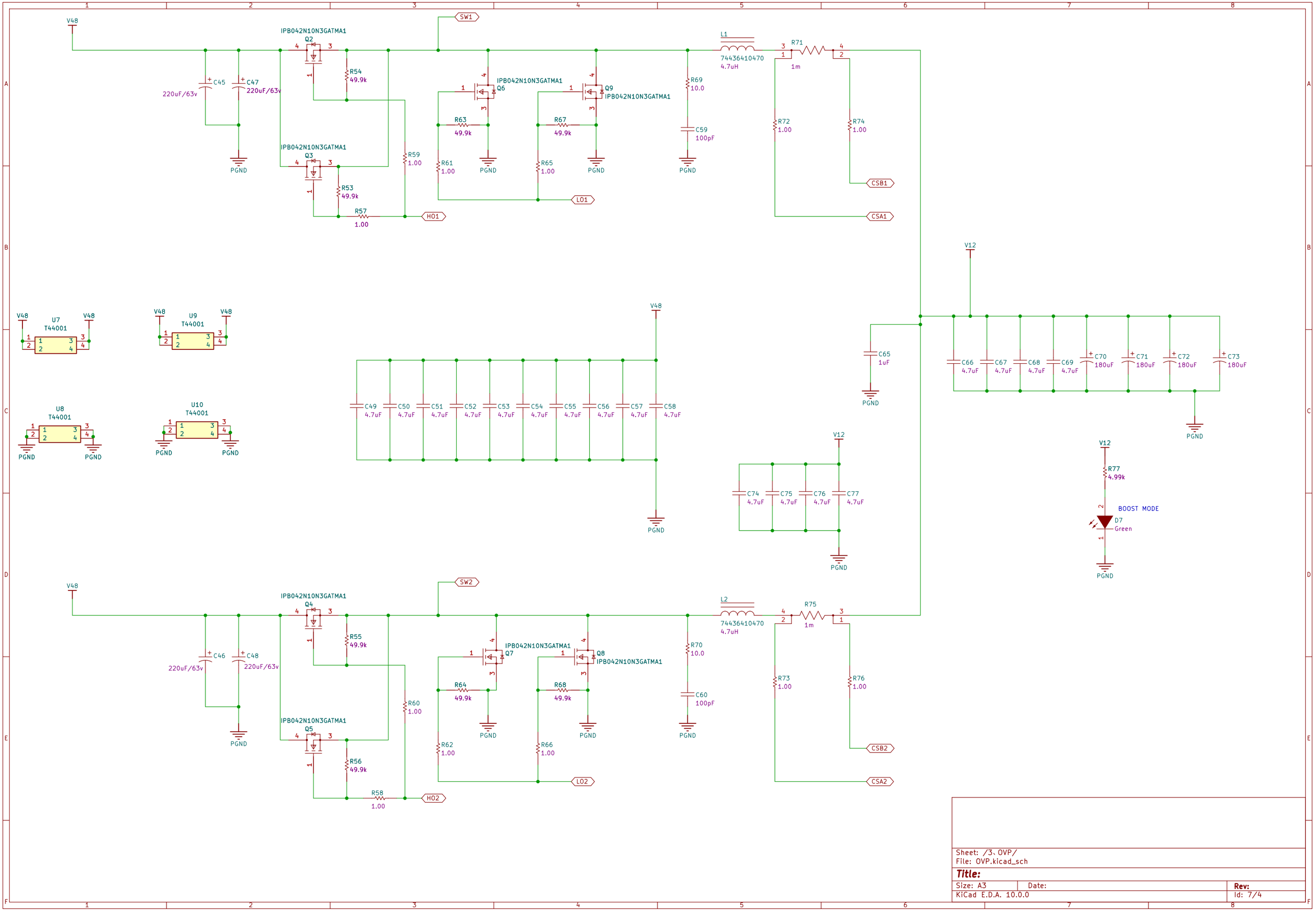

Sheet: /3. OVP/
File: OVP.kicad_sch

Title:

Size: A3	Date:	Rev:
KiCad E.D.A. 10.0.0		Id: 7/4