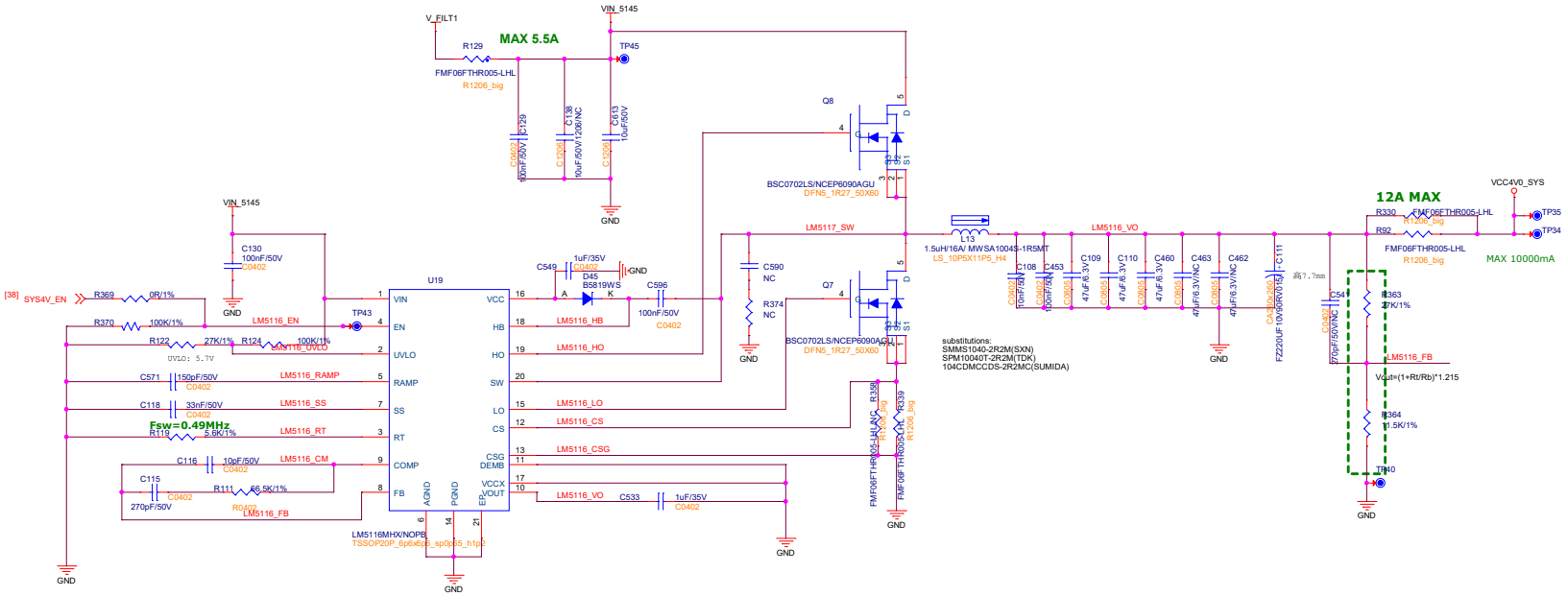

V_FILT1
R129
MAX 5.5A
FMF06FTHR005-LHL
R1206_big
VIN_5145
TP45
C129
C138
C613
10uF/50V
C1206
C0402
100nF/50V
GND
Q8
BSC0702LS/NCEP6090AGU
DFN5_1R27_50X60
LM5117_SW
L13
1.5uH/16A/ MWSA1004S-1R5MT
LS_10P5X11P5_H4
LM5116_VO
C108
C453
C109
C110
C460
C463
C462
47uF/6.3V
C111
FZ220UF 10V/90RV/0.5
12A MAX
R330
R92
VCC4V0_SYS
TP35
TP34
MAX 10000mA
C541
270pF/50V/NC
R363
27K/1%
LM5116_FB
Vout=(1+Rt/Rb)*1.215
R364
1.5K/1%
TP40
C130
100nF/50V
C0402
[38] SYS4V_EN
R369
0R/1%
R370
100K/1%
LM5116_EN
TP43
R122
27K/1%
R124
100K/1%
LM5116_UVLO
UVLO: 5.7V
C571
150pF/50V
LM5116_RAMP
C118
33nF/50V
LM5116_SS
Fsw=0.49MHz
R119
5.6K/1%
LM5116_RT
C116
10pF/50V
LM5116_CM
C115
270pF/50V
R111
66.5K/1%
R0402
LM5116_FB
U19
VIN
EN
UVLO
RAMP
SS
RT
COMP
FB
AGND
PGND
EP
VCC
HB
HO
SW
LO
CS
CSG
DEMB
VCCX
VOUT
LM5116MHX/NOPB
TSSOP20P_6p6x6p6_sp0p65_h1p2
C549
1uF/35V
D45
B5819WS
C596
100nF/50V
C590
NC
R374
NC
Q7
BSC0702LS/NCEP6090AGU
DFN5_1R27_50X60
R358
R339
FMF06FTHR005-LHL
R1206_big
C533
1uF/35V
substitutions:
SMMS1040-2R2M(SXN)
SPM10040T-2R2M(TDK)
104CDMCCDS-2R2MC(SUMIDA)