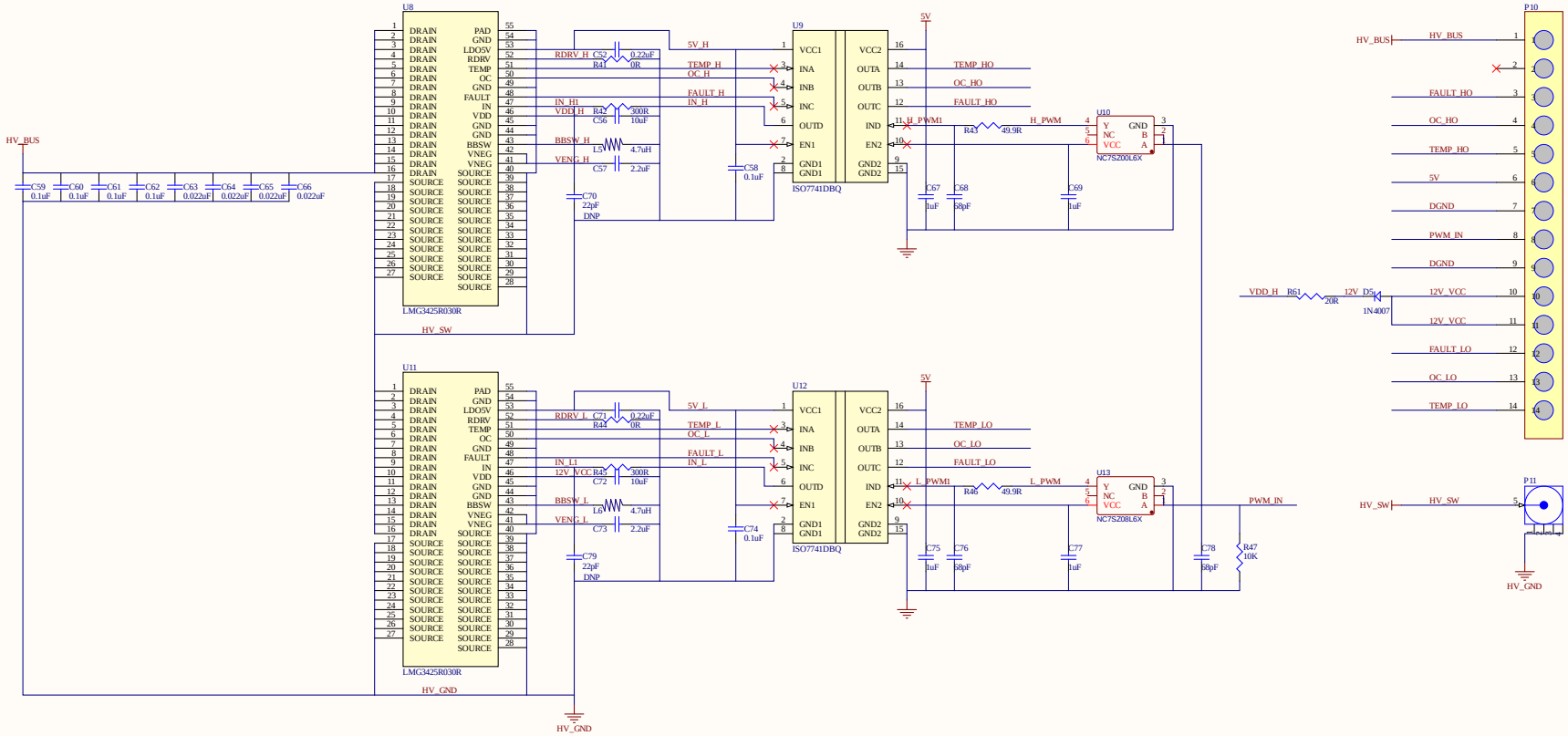

Title		
Size C	Number	Revision
Date: 3/10/2021	Sheet of	
File: E:\项目专案\..\3425PULSE_V1.SchDoc	Drawn By:	