>13.1V
DC_IN-->12AL

COPY JW-J1900

DC-IN

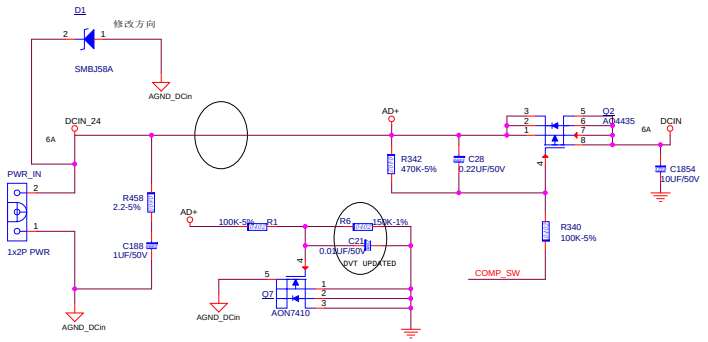

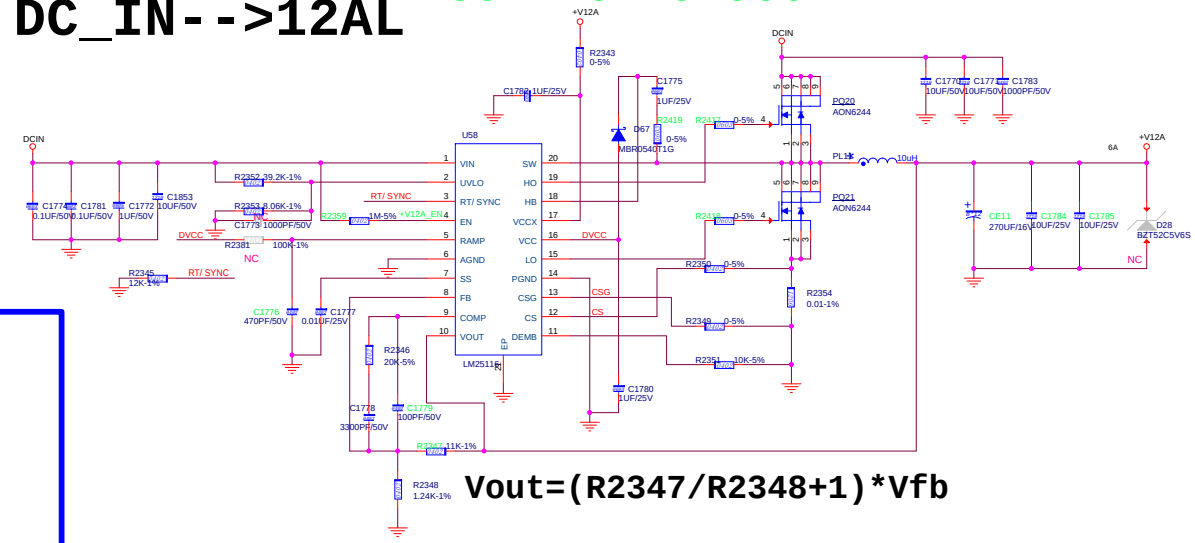

Vout=(R2347/R2348+1)*Vfb

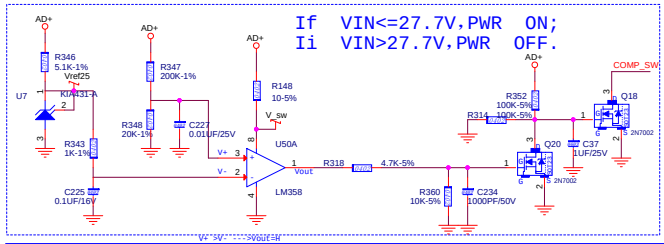

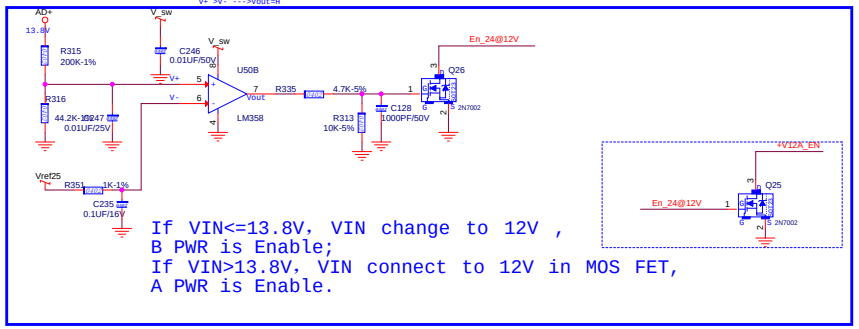

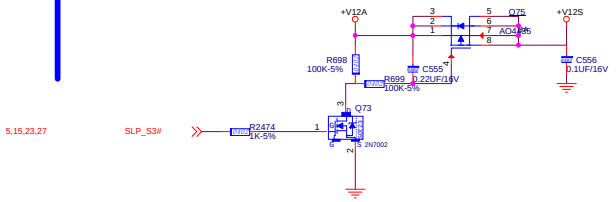

VO=(R1/R2+1)*0.6

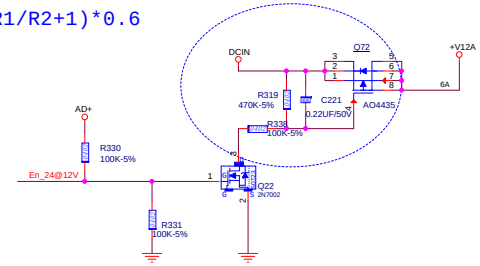

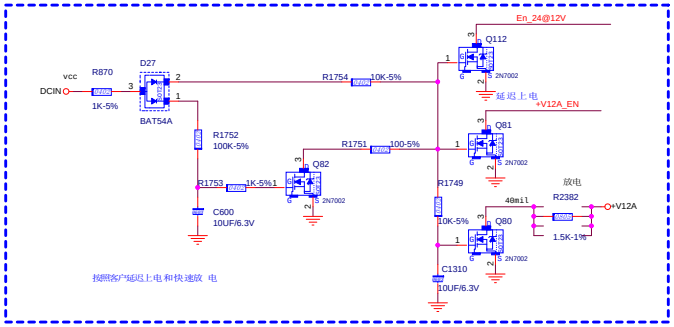

Shenzhen Comstar Technology Co.,Ltd.	
Page name	Adaper in
Size / Project name	PEB-6601-8TH
Rev	1.0
DateTuesday, April 27, 2021	Sheet 22 of 38

PROPERTY NOTE:This document contains confidential and property to COMSTAR and shall not be reproduced or tranferred to oher documents or disclosed to others or used for any purpose other than that for which it was obtained without the expressed written consent of COMSTAR.