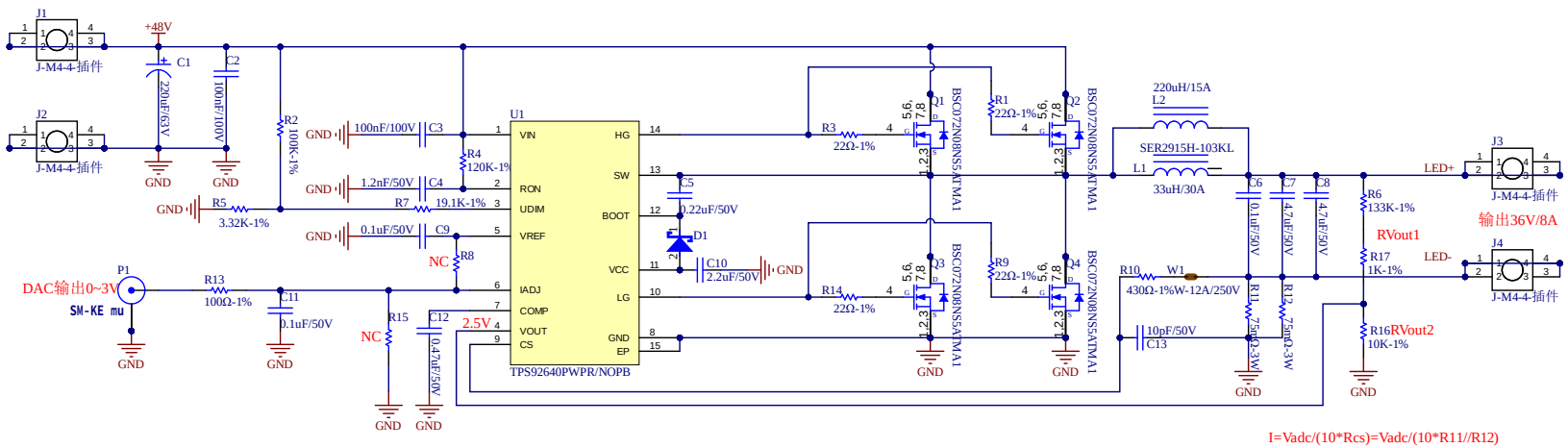

设定Pin4(Vout)的反馈电压为2.5V
2.5V=V(led+)*[RVout2/(RVout1+RVout2)]
RVout2=10K　RVout1=134K
Con=1.2nF　Ron=120K　Fsw=100K
Δi-ppLed=0.5A　L=220uH

I=Vadc/(10*Rcs)=Vadc/(10*R11//R12)
Vadc∈(0~3V)；R11//R12=0.0375Ω
I∈(0~8A)
Pd(Rs)=I²*Rs=0.0375Ω=2.4W