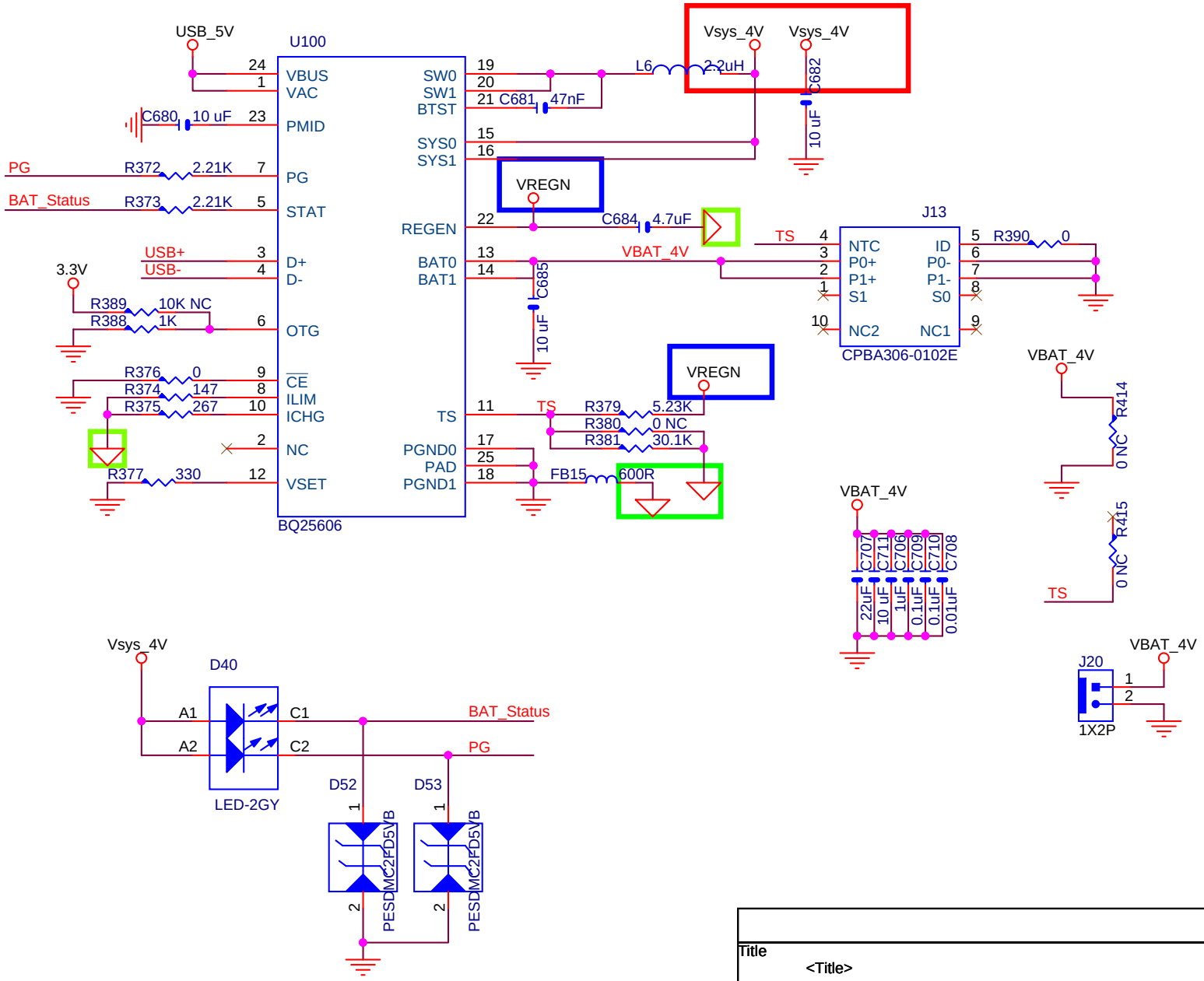

Title	<Title>	
Size A	Document Number <Doc>	Rev <RevCode>
Date: Friday, November 09, 2018	Sheet 1 of 1	