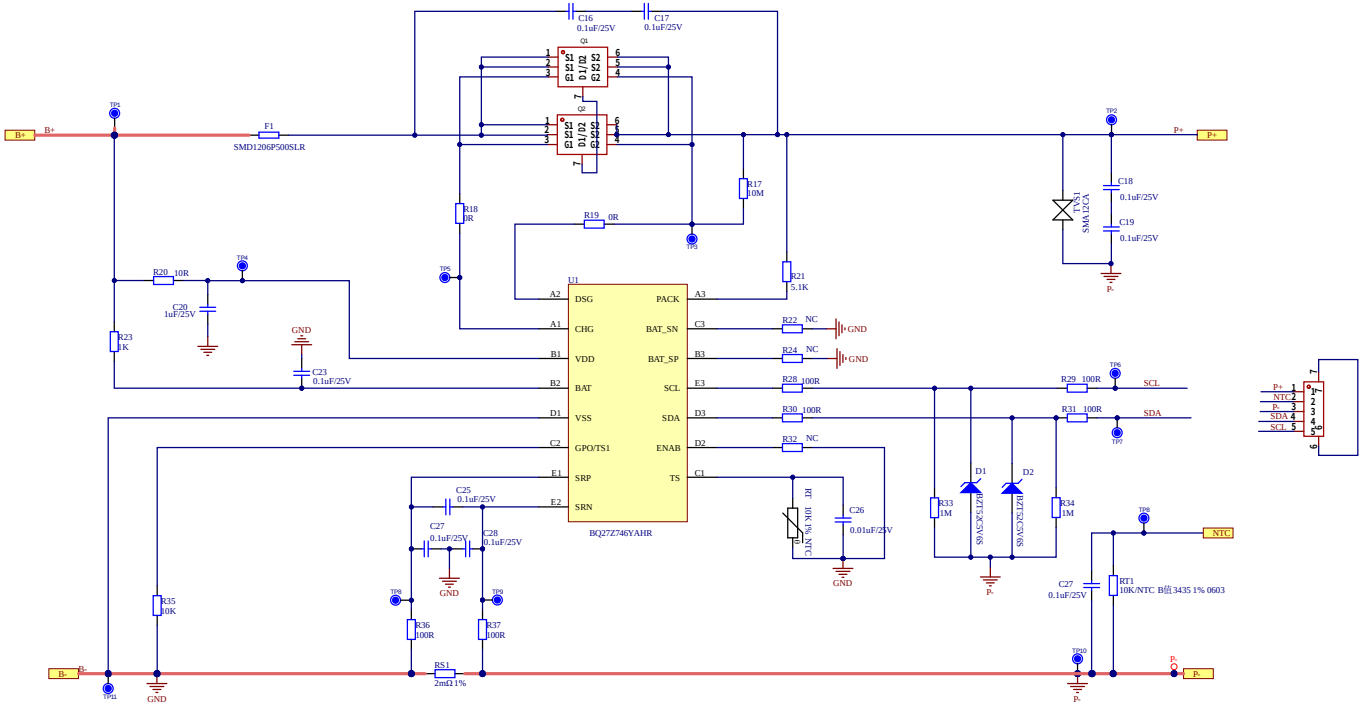

Title		
Size A2	Number	Revision
Date: 9/09/2025	Sheet of	
File: C:\Users\...\Copy of 1S3P-BQ27Z746.SchDoc	Drawn By:	