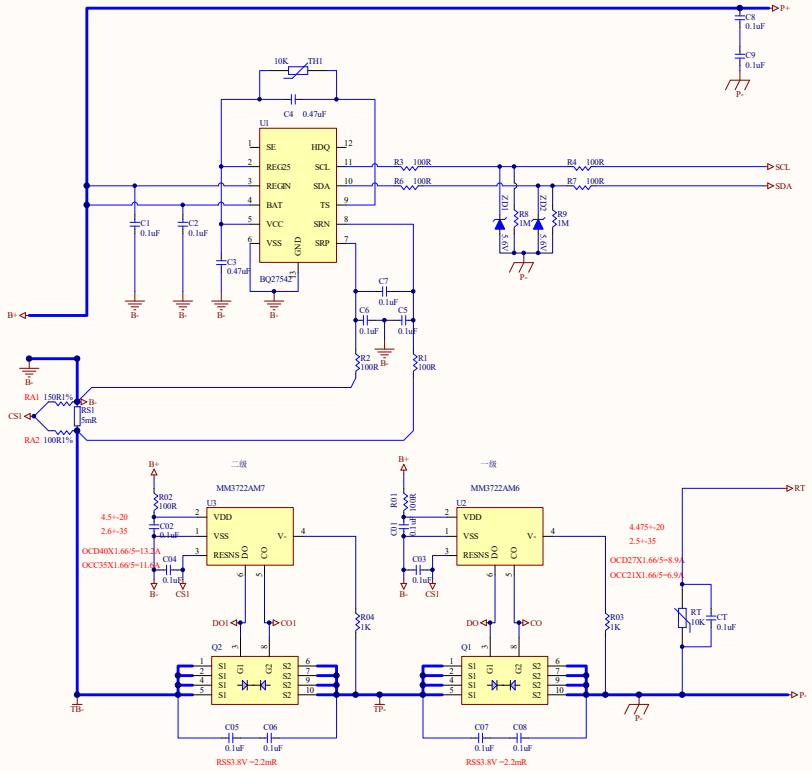

Title		
Size A4	Number	Revision
Date: 2025/3/7		Sheet of
File: F:\苏龙生项目\...GW-PM95-BQ27542-ULTRA-V1.0-2.SchDoc		Drawn by: