**充电状态信号**

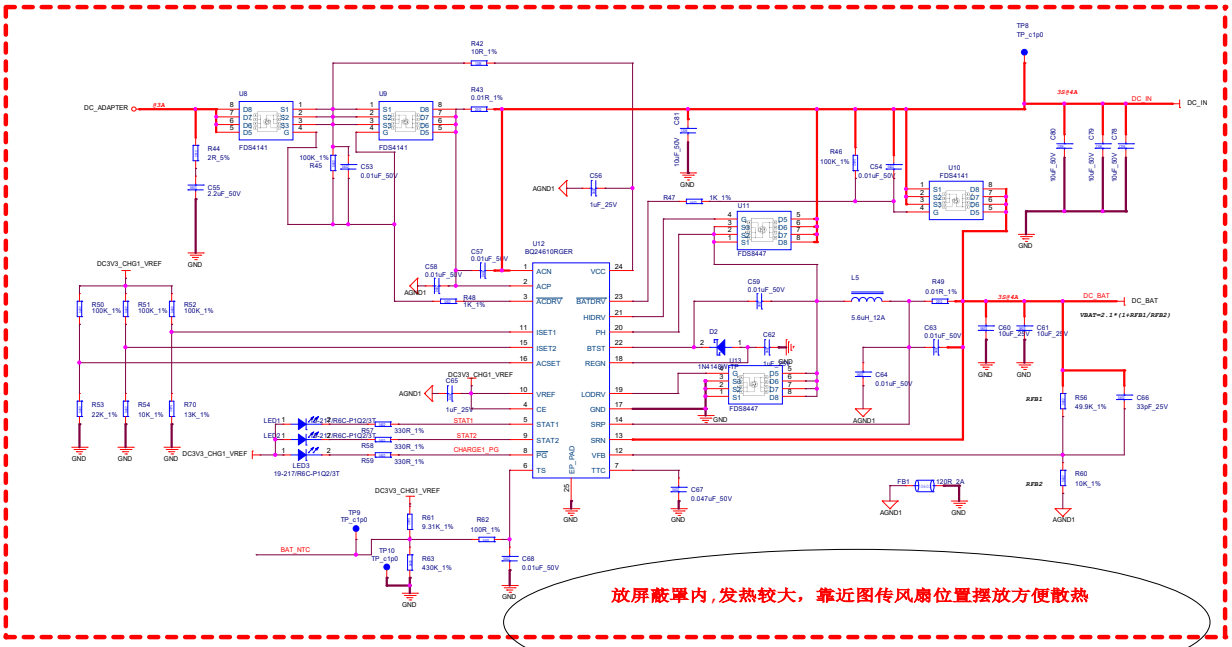


放屏蔽罩内，发热较大，靠近图传风扇位置摆放方便散热

***充电电流：*** $I_{CHARGE} = \frac{V_{ISET1}}{20 \times R_{SR}}$ ***1.9A***

***充电器输入电流：*** $I_{DPM} = \frac{V_{ACSET}}{20 \times R_{AC}}$ ***3A***

***预先充电电流：*** $I_{PRECHARGE} = \frac{V_{ISET2}}{100 \times R_{SR}}$ ***0.3A***

| | | |
|---|---|---|
| Title | <Title> | |
| Size C | Document Number <Doc> | Rev <RevCode> |
| Date: Monday, July 20, 2020 | Sheet 6 of 8 | |