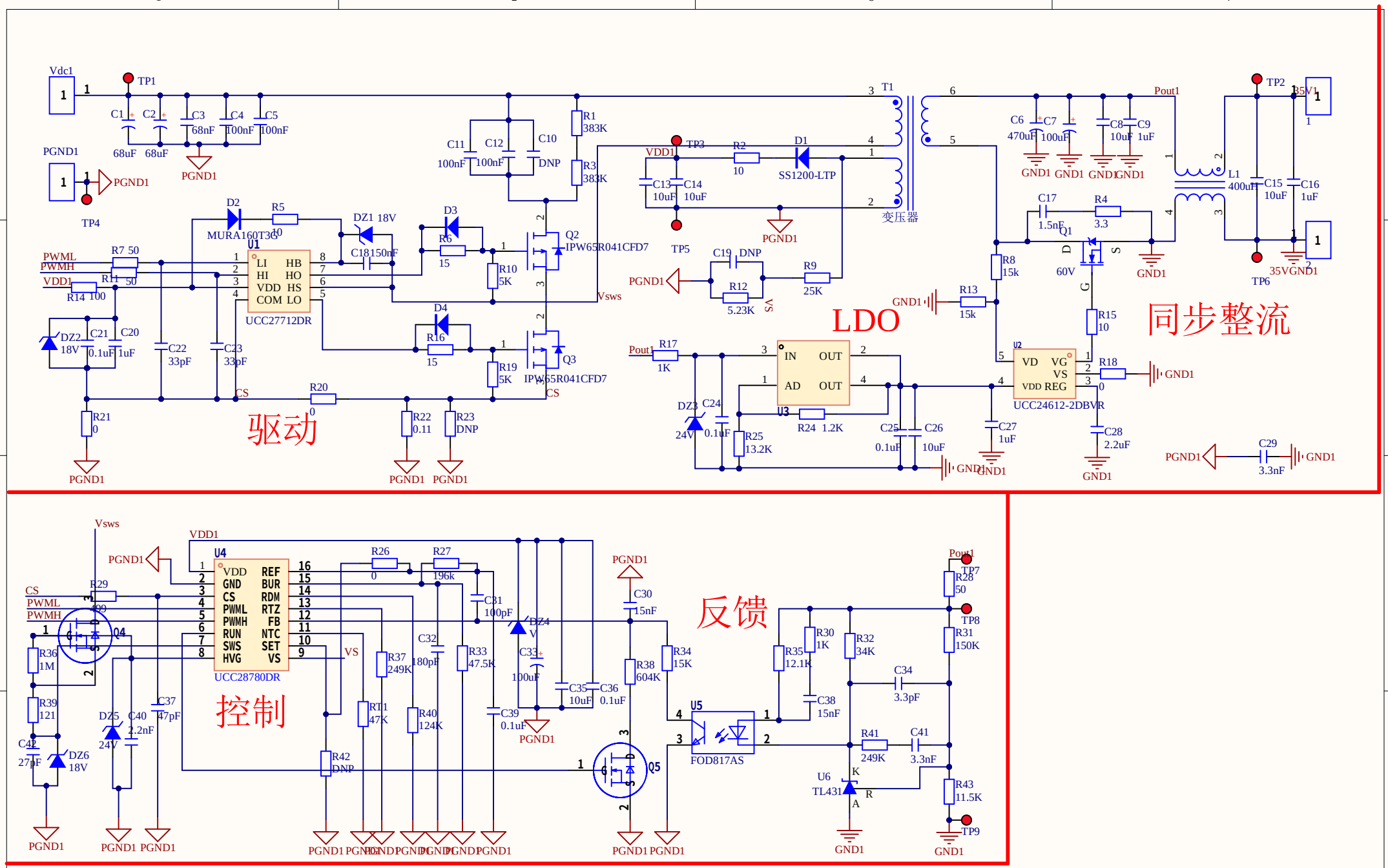
Vdc1
TP1
C1 68uF
C2 68uF
C3 68nF
C4 100nF
C5 100nF
PGND1
TP4
D2 MURA160T3G
R5 10
DZ1 18V
C18 150nF
U1
UCC27712DR
LI HI VDD COM HB HO HS LO
PWML
PWMH
VDD1
R7 50
R11 50
R14 100
DZ2 18V
C21 0.1uF
C20 1uF
C22 33pF
C23 33pF
CS
R20 0
R21 0
R22 0.11
R23 DNP
驱动
C11 100nF
C12 100nF
C10 DNP
R1 383K
R3 383K
D3
R6 15
R10 5K
Q2 IPW65R041CFD7
D4
R16 15
R19 5K
Q3 IPW65R041CFD7
Vsws
TP3
VDD1
C13 10uF
C14 10uF
R2 10
D1 SS1200-LTP
T1
变压器
TP5
C19 DNP
R12 5.23K
R9 25K
VS
Pout1
R17 1K
DZ3 24V
C24 0.1uF
R25 13.2K
IN OUT AD OUT
U3
R24 1.2K
C25 0.1uF
C26 10uF
LDO
C6 470uF
C7 100uF
C8 10uF
C9 1uF
GND1
L1 400uH
C15 10uF
C16 1uF
TP2
35V1
TP6
35V
C17 1.5nF
R4 3.3
Q1 60V
R8 15k
R13 15k
R15 10
U2
VD VG VS VDD REG
UCC24612-2DBVR
R18 0
C27 1uF
C28 2.2uF
同步整流
C29 3.3nF
Vsws
VDD1
U4
UCC28780DR
VDD GND CS PWML PWMH RUN SWS HVG REF BUR RDM RTZ FB NTC SET VS
R29 499
Q4
R36 1M
R39 121
C42 27pF
DZ6 18V
DZ5 24V
C40 2.2nF
C37 47pF
R26 0
R27 196k
C31 100pF
C32 180pF
R33 47.5K
R37 249K
RT1 47K
R40 124K
R42 DNP
C39 0.1uF
DZ4
C33 100uF
C35 10uF
C36 0.1uF
C30 15nF
R38 604K
R34 15K
Q5
U5
FOD817AS
R35 12.1K
R30 1K
R32 34K
C38 15nF
C34 3.3pF
R41 249K
C41 3.3nF
U6 TL431
R43 11.5K
Pout1
TP7
R28 50
TP8
R31 150K
TP9
反馈

Board Stack Report