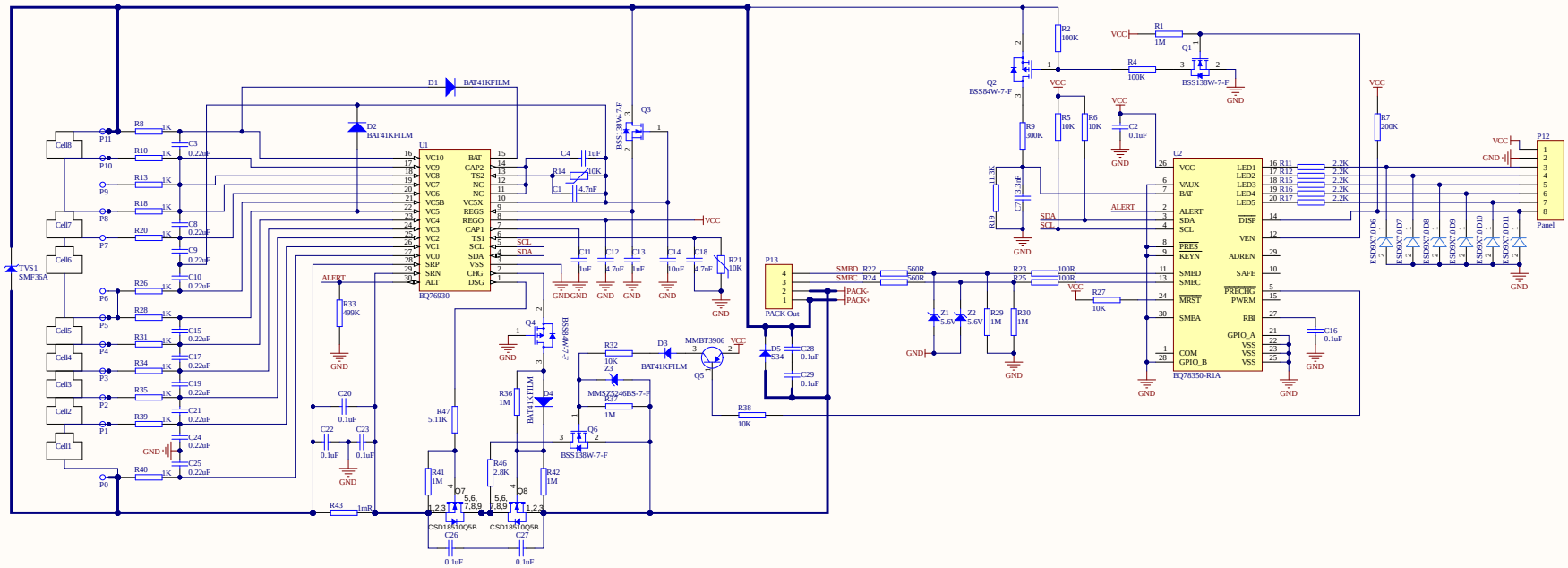

Title		
Size A2	Number	Revision
Date: 4/12/2023	Sheet of	
File: E:\Project_XuanYu\..\BATBoard - gai.SchDoc	Drawn By:	

Board Stack Report