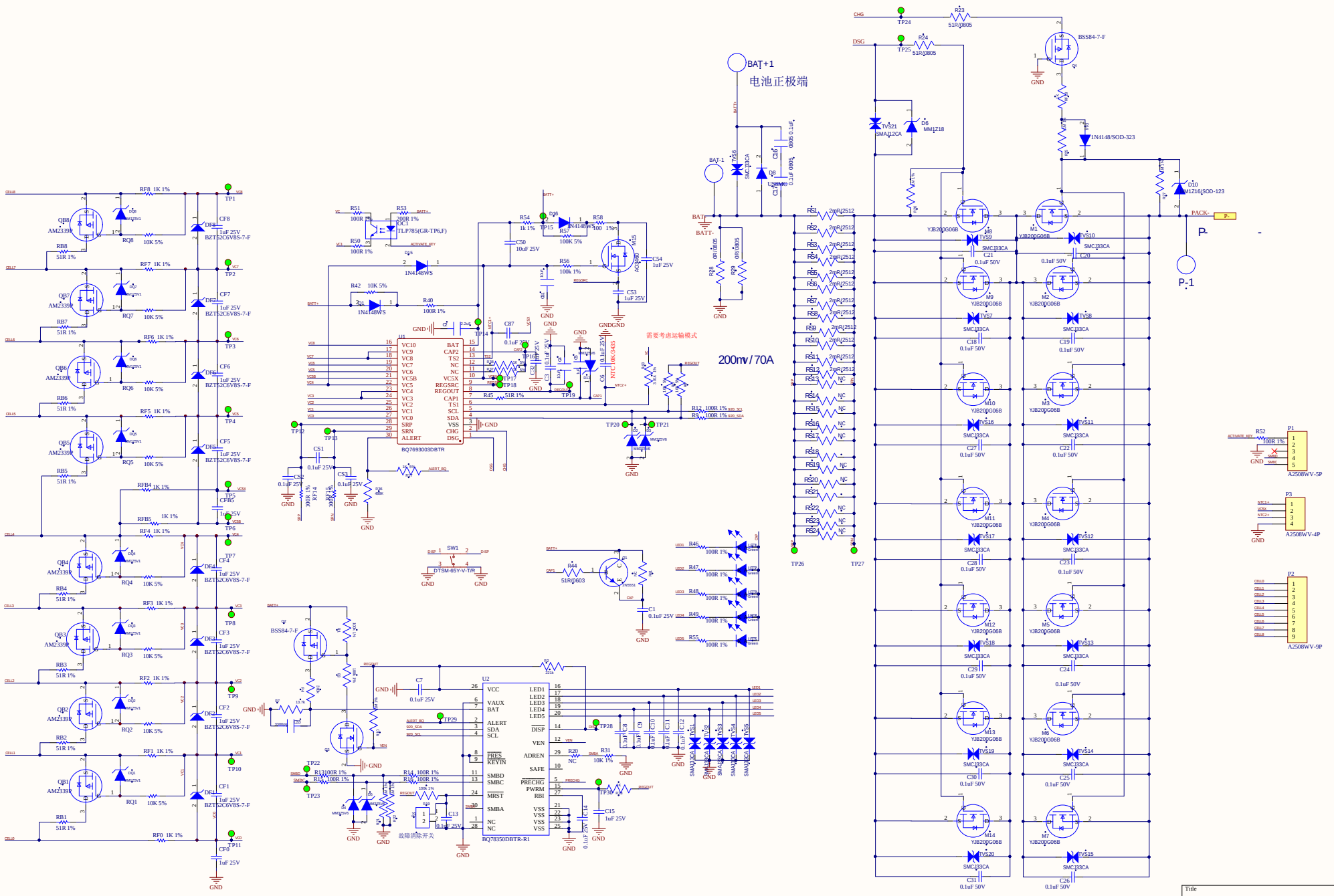

Title		
Size A2	Number	Revision
Date: 2022/9/5	Sheet of	
File: D:\项目资料\.\BQ76930+BQ78350修改.DchDoc	Drawn By:	