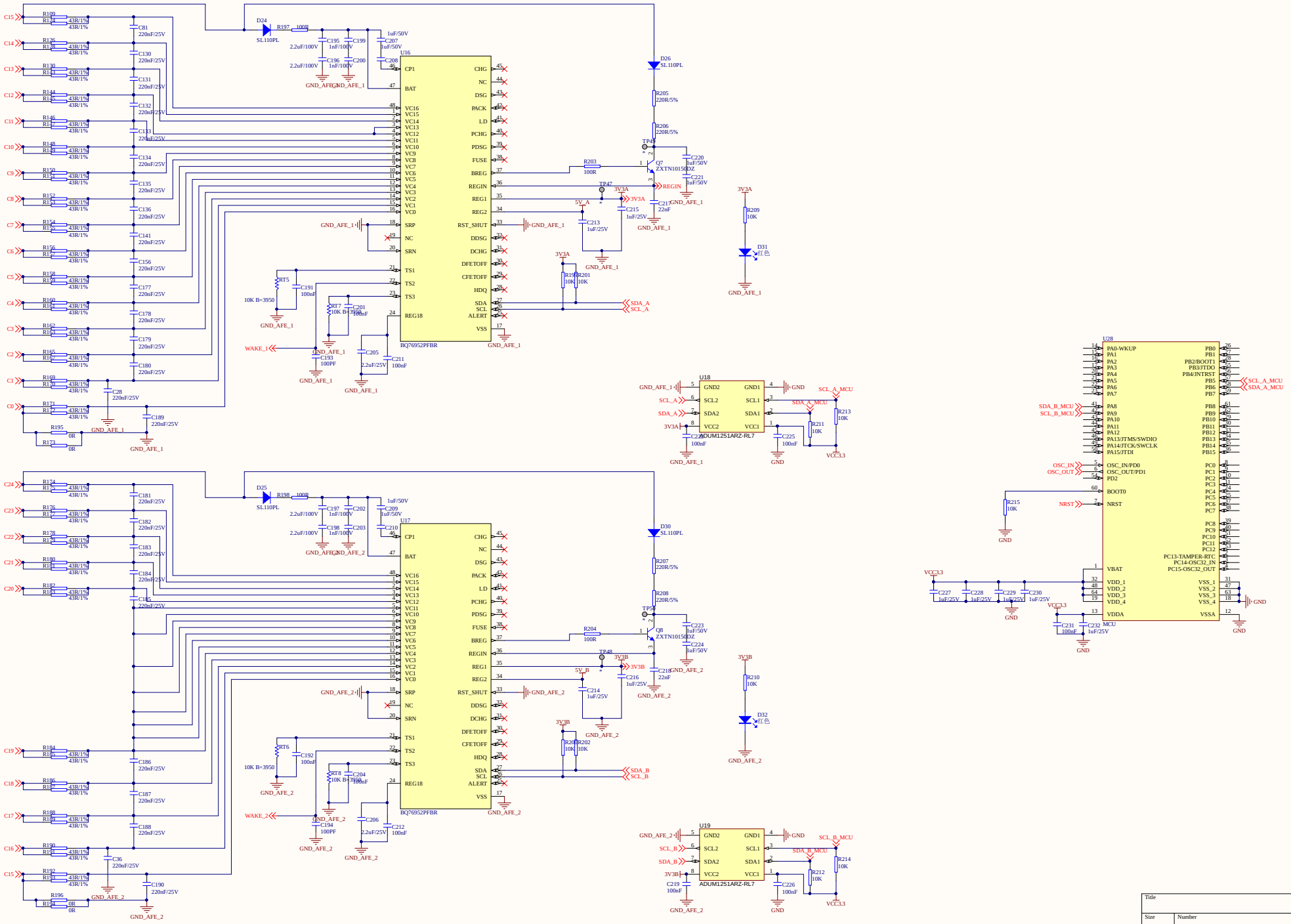

Title		
Size A2	Number	Revision
Date: 2021/7/16	Sheet	of
File: C:\Users\...\BQ76952_24串电池电压版.PrjPcb	Drawn By:	