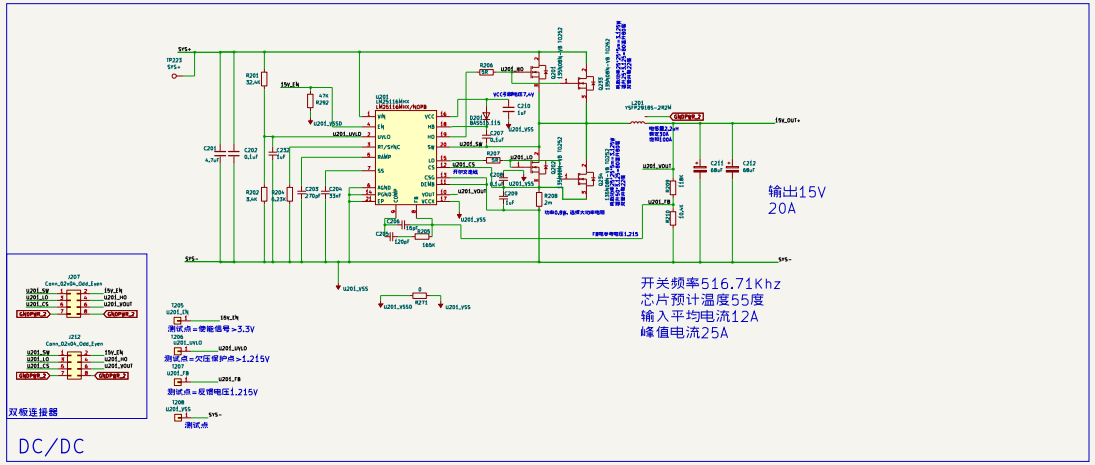

Sheets /
File: BAT_PROTECT.kicad_sch
Title:
Size: A1 | Date: | Rev:
KiCad 8.0.4, 9.0.0 | No. 5/5