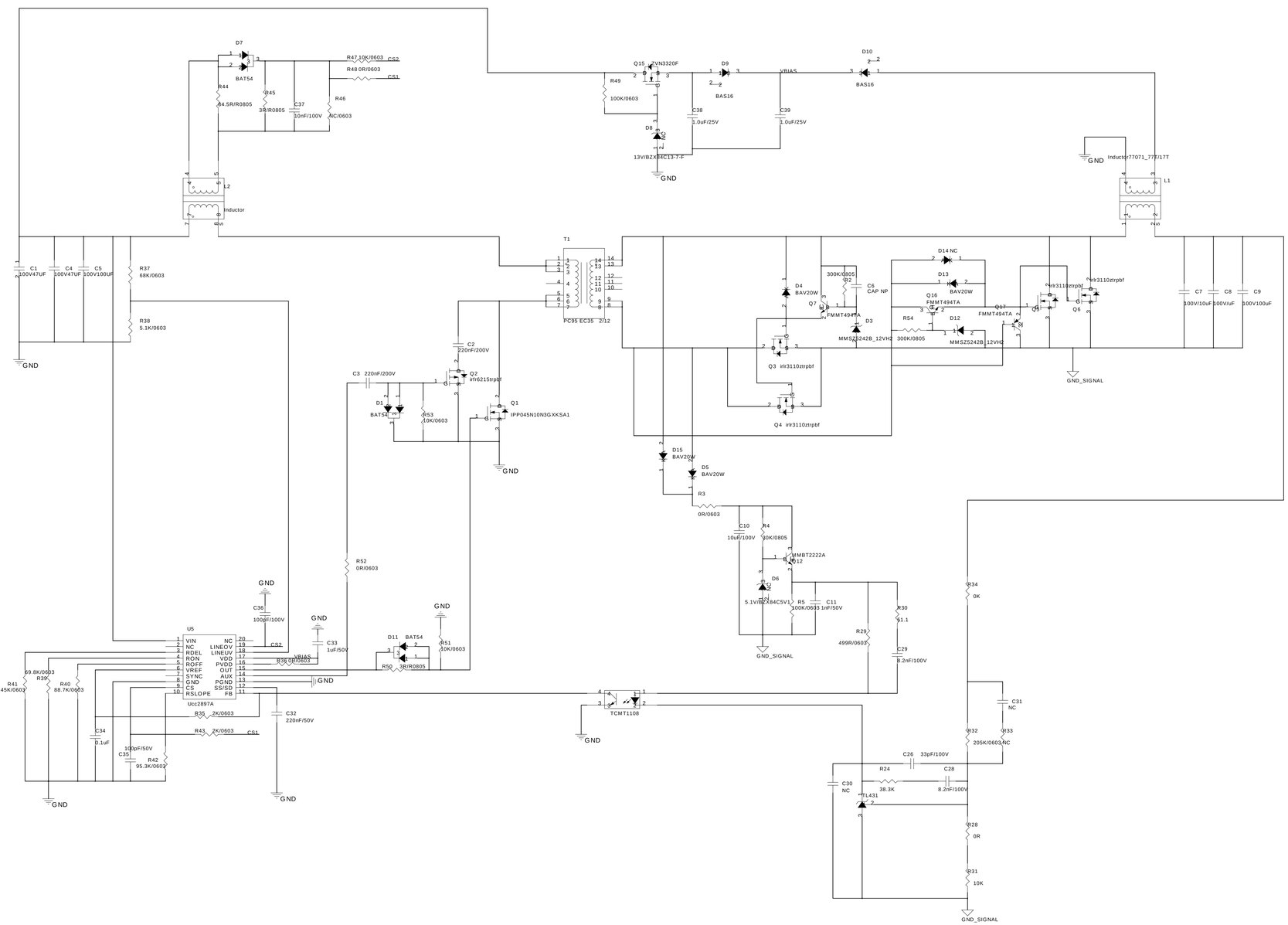


| | | |
|---|---|---|
| Title | | |
| Size D | Document Number | Rev 7 |
| Date: Sunday, May 30, 2021 | Sheet 1 of 1 | |