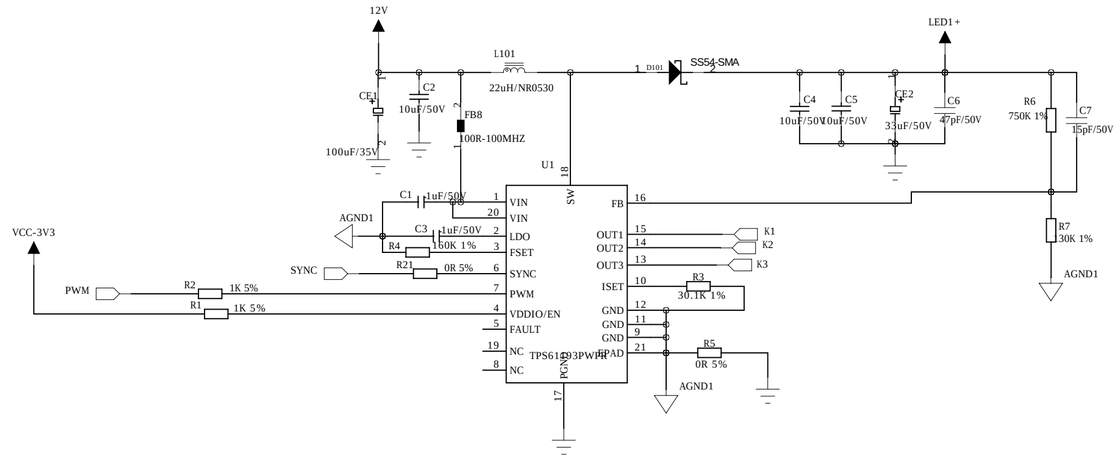
12V
L101
22uH/NR0530
D101
SS54-SMA
LED1+
CE1
100uF/35V
C2
10uF/50V
FB8
100R-100MHZ
C4
10uF/50V
C5
10uF/50V
CE2
33uF/50V
C6
47pF/50V
R6
750K 1%
C7
15pF/50V
R7
30K 1%
AGND1
U1
C1
1uF/50V
C3
1uF/50V
R4
160K 1%
R21
0R 5%
R2
1K 5%
R1
1K 5%
VCC-3V3
PWM
SYNC
VIN
LDO
FSET
VDDIO/EN
FAULT
NC
SW
FB
OUT1
OUT2
OUT3
ISET
GND
EPAD
PGND
K1
K2
K3
R3
30.1K 1%
R5
0R 5%
TPS61093PWP

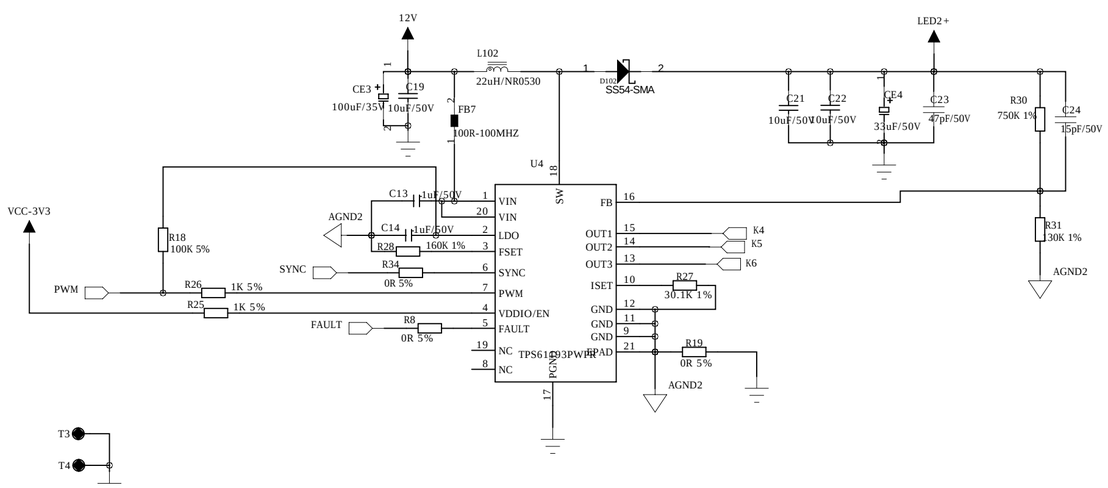
12V
L102
22uH/NR0530
D102
SS54-SMA
LED2+
CE3
100uF/35V
C19
10uF/50V
FB7
100R-100MHZ
C21
10uF/50V
C22
10uF/50V
CE4
33uF/50V
C23
47pF/50V
R30
750K 1%
C24
15pF/50V
R31
30K 1%
AGND2
U4
C13
1uF/50V
C14
1uF/50V
R28
160K 1%
R18
100K 5%
R34
0R 5%
R26
1K 5%
R25
1K 5%
R8
0R 5%
VCC-3V3
PWM
SYNC
FAULT
K4
K5
K6
R27
30.1K 1%
R19
0R 5%
TPS61093PWP

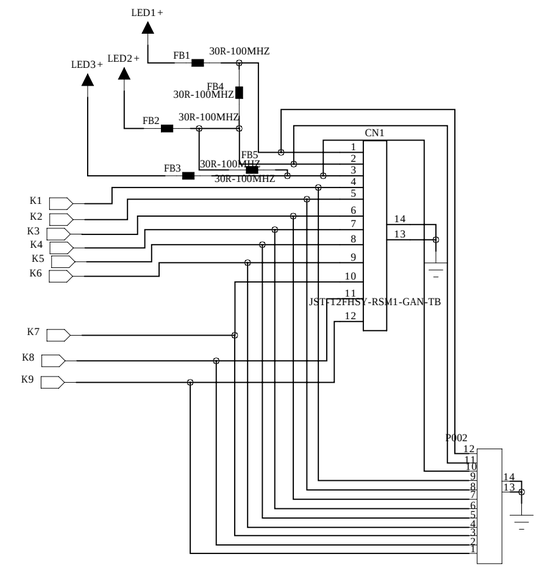
LED1+
LED2+
LED3+
FB1
30R-100MHZ
FB4
30R-100MHZ
FB2
30R-100MHZ
FB5
30R-100MHZ
FB3
30R-100MHZ
CN1
K1
K2
K3
K4
K5
K6
K7
K8
K9
JST12FHSY-RSM1-GAN-TB
P002

T3
T4

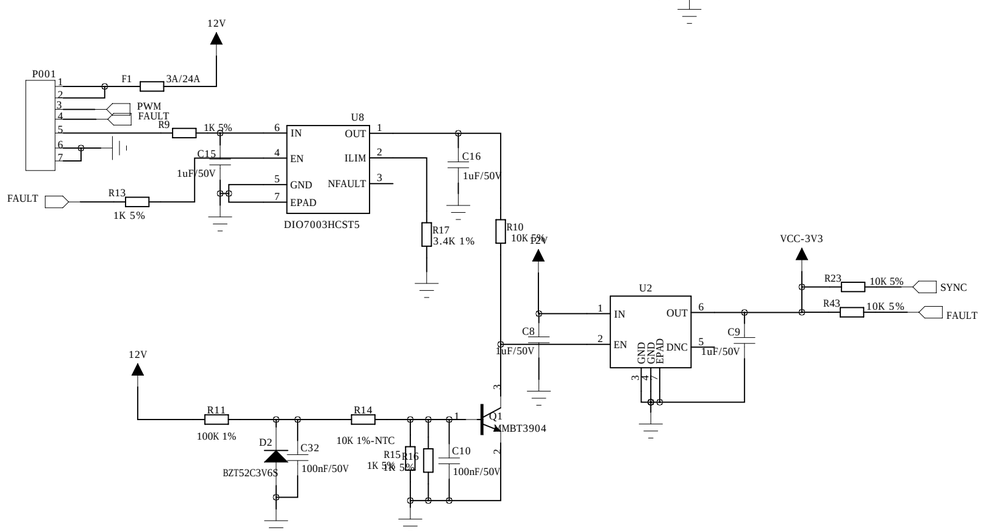
12V
P001
F1
3A/24A
PWM
FAULT
R9
1K 5%
U8
IN
EN
GND
EPAD
OUT
ILIM
NFAULT
DIO7003HCST5
C15
1uF/50V
R13
1K 5%
C16
1uF/50V
R17
3.4K 1%
R10
10K 5%
24V
U2
C8
1uF/50V
C9
1uF/50V
VCC-3V3
R23
10K 5%
R43
10K 5%
SYNC
FAULT
DNC
R11
100K 1%
D2
BZT52C3V6S
C32
100nF/50V
R14
10K 1%-NTC
R15
1K 5%
R16
1K 5%
C10
100nF/50V
Q1
MMBT3904

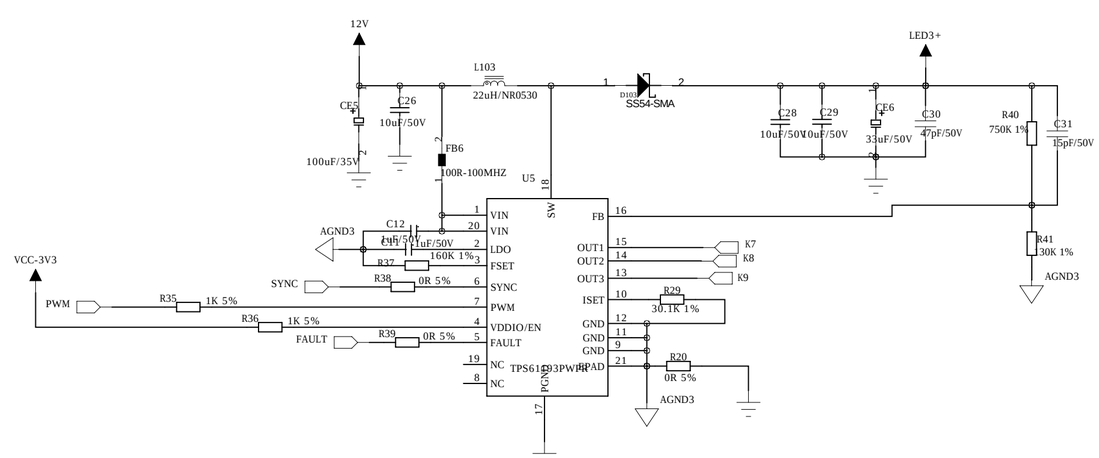
12V
L103
22uH/NR0530
D103
SS54-SMA
LED3+
CE5
100uF/35V
C26
10uF/50V
FB6
100R-100MHZ
C28
10uF/50V
C29
10uF/50V
CE6
33uF/50V
C30
47pF/50V
R40
750K 1%
C31
15pF/50V
R41
30K 1%
AGND3
U5
C12
1uF/50V
R37
160K 1%
R38
0R 5%
R35
1K 5%
R36
1K 5%
R39
0R 5%
VCC-3V3
PWM
SYNC
FAULT
K7
K8
K9
R29
30.1K 1%
R20
0R 5%
TPS61093PWP