LED Driver circle

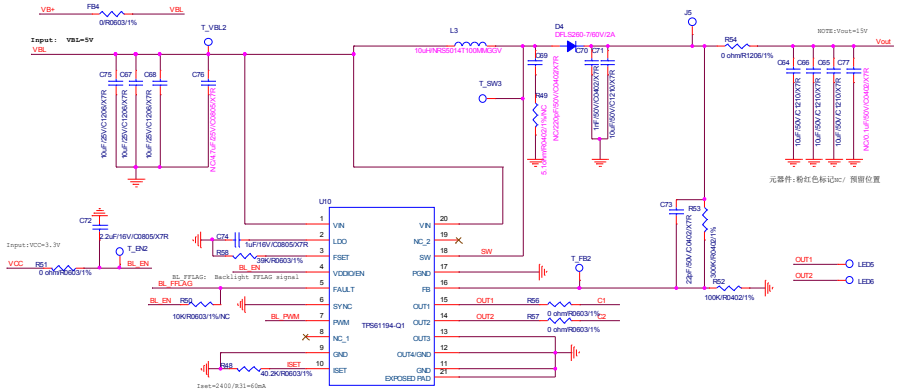

NOTE:Compenents L1/R22/R24 /R20/R21/C33/C34 closed to U4
L1 closed to D2 and under L1 can not laoyout

Title	<Title>		
Size	Document Number		Rev
	Custom<Doc>		<RevCode>
Date:	Friday, January 28, 2022	Sheet 1 of 1	