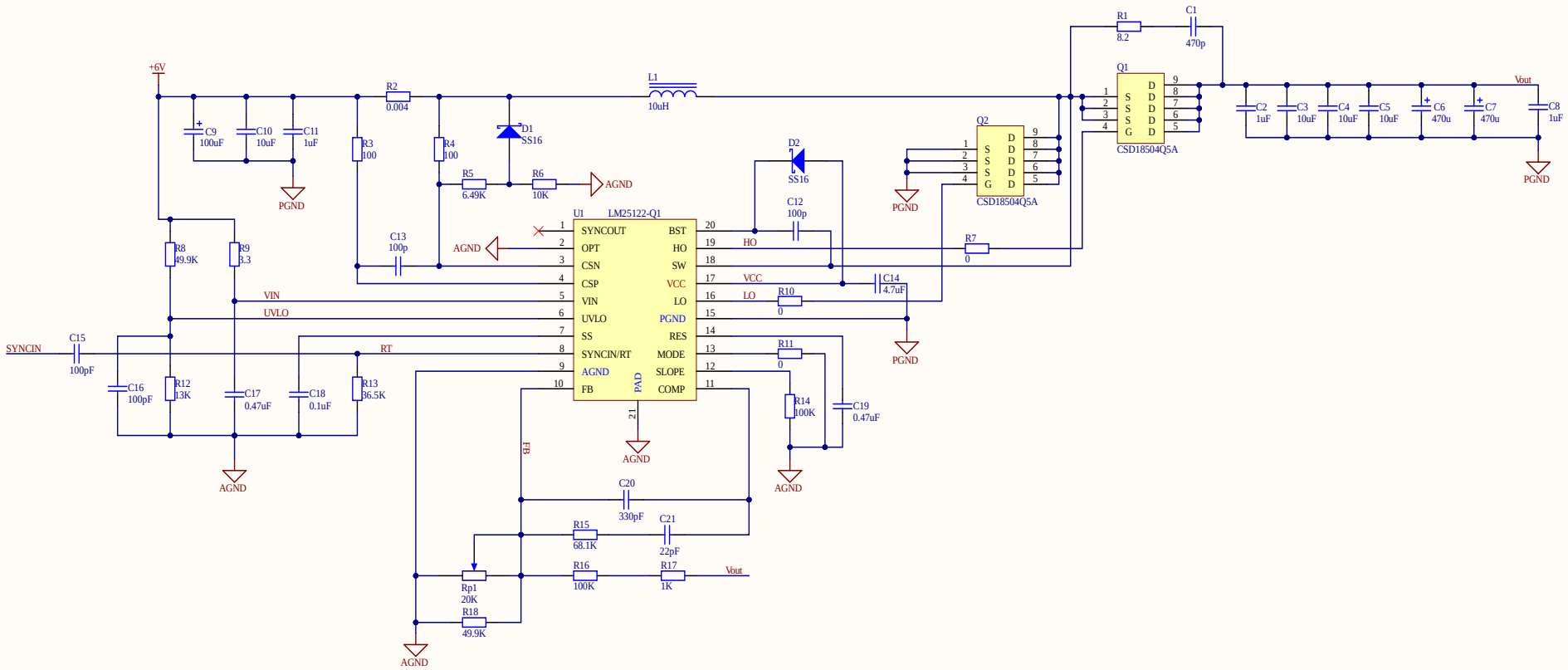

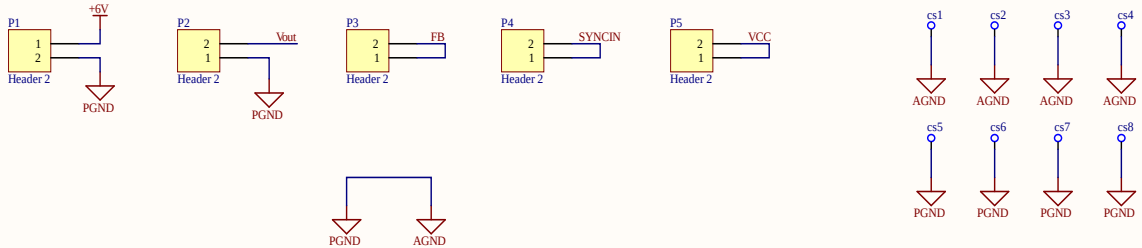

Title		
Size A3	Number	Revision
Date: 1/08/2021	Sheet of	
File: G:\AD20\..\LM25122-Q1-YZB-Sch.SchDoc	Drawn By:	