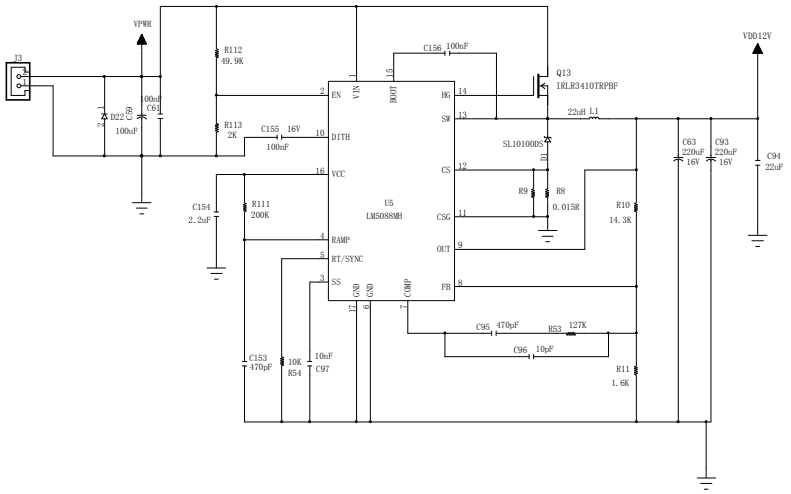

TITLE:		
SIZE: B	Number:	REV:
DATE:		DRAWN:
Filename:		Sheet: