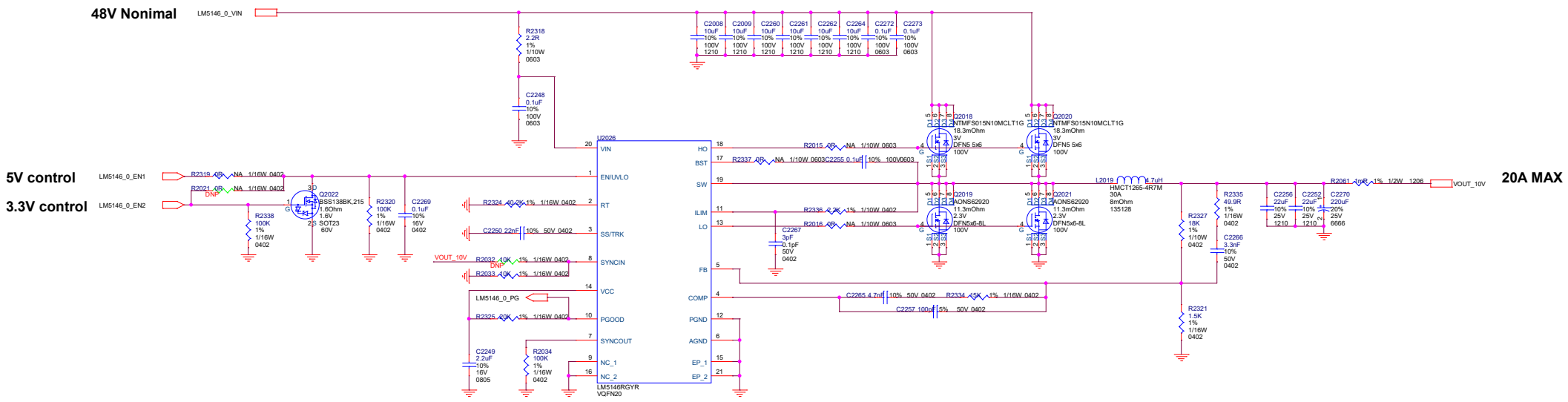

Project : <Project>	PEGASUS 云翼	Title <Title>	
		Size A2	Rev <RevCode>
		Date: Friday, September 27, 2024	Sheet <PageNumber>Page Count>