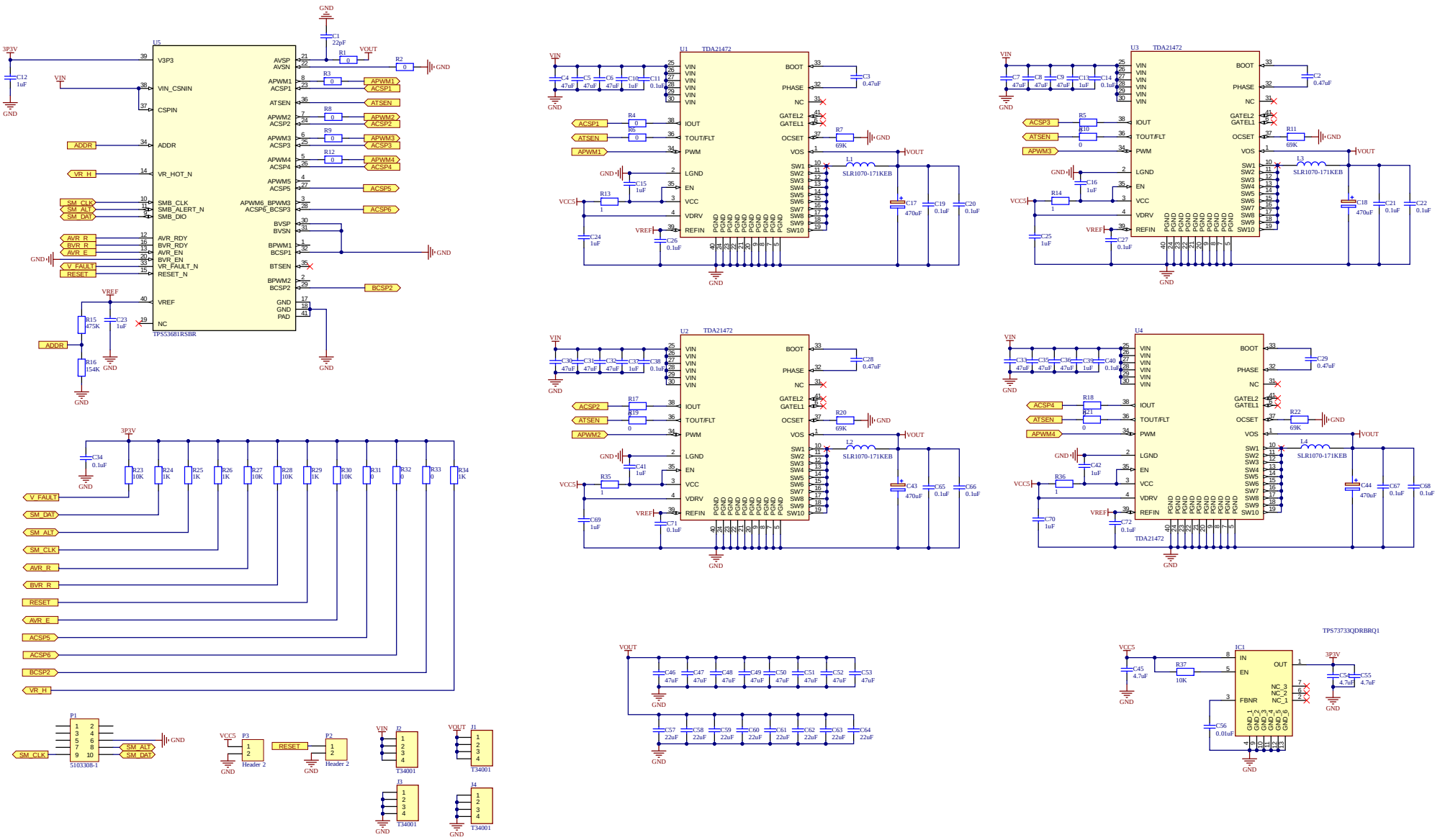
U5
TPS53681RSBR
V3P3
VIN_CSNIN
CSPIN
ADDR
VR_HOT_N
SMB_CLK
SMB_ALERT_N
SMB_DIO
AVR_RDY
BVR_RDY
AVR_EN
BVR_EN
VR_FAULT_N
RESET_N
VREF
NC
AVSP
AVSN
APWM1
ACSP1
ATSEN
APWM2
ACSP2
APWM3
ACSP3
APWM4
ACSP4
APWM5
ACSP5
APWM6_BPWM3
ACSP6_BCSP3
BVSP
BVSN
BPWM1
BCSP1
BTSEN
BPWM2
BCSP2
GND
PAD
U1 TDA21472
U2 TDA21472
U3 TDA21472
U4 TDA21472
SLR1070-171KEB
TPS73733QDRBRQ1
IC1
P1
5103308-1
P2
P3
Header 2
J1
J2
J3
J4
T34001
3P3V
VIN
VOUT
VCC5
VREF
GND