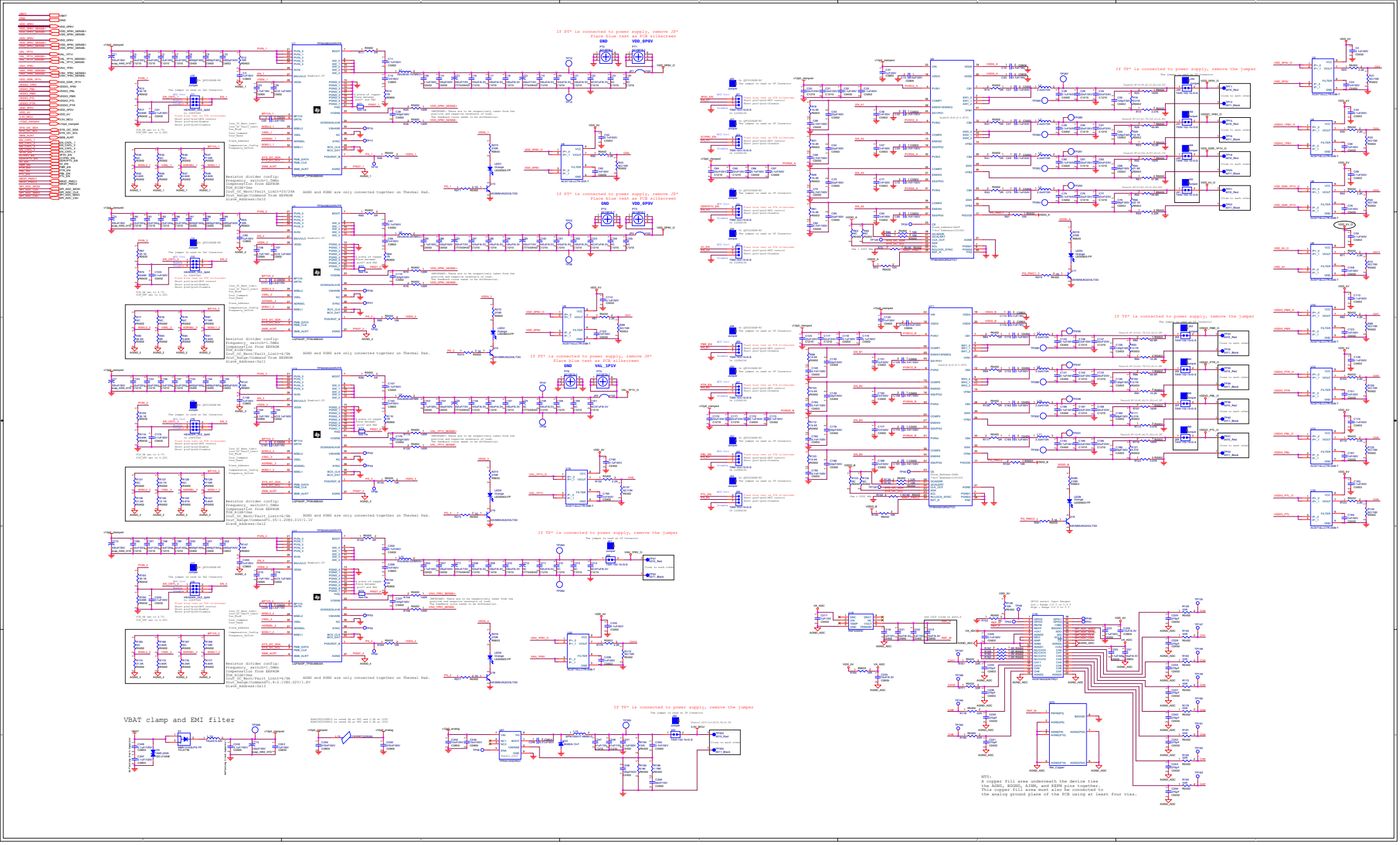
VBAT clamp and EMI filter
If PT* is connected to power supply, remove JP*
Place blue text on PCB silkscreen
If TP* is connected to power supply, remove the jumper
NT5:
A copper fill area underneath the device ties
the AGND, BGGND, AINM, and REFM pins together.
This copper fill area must also be connected to
the analog ground plane of the PCB using at least four vias.