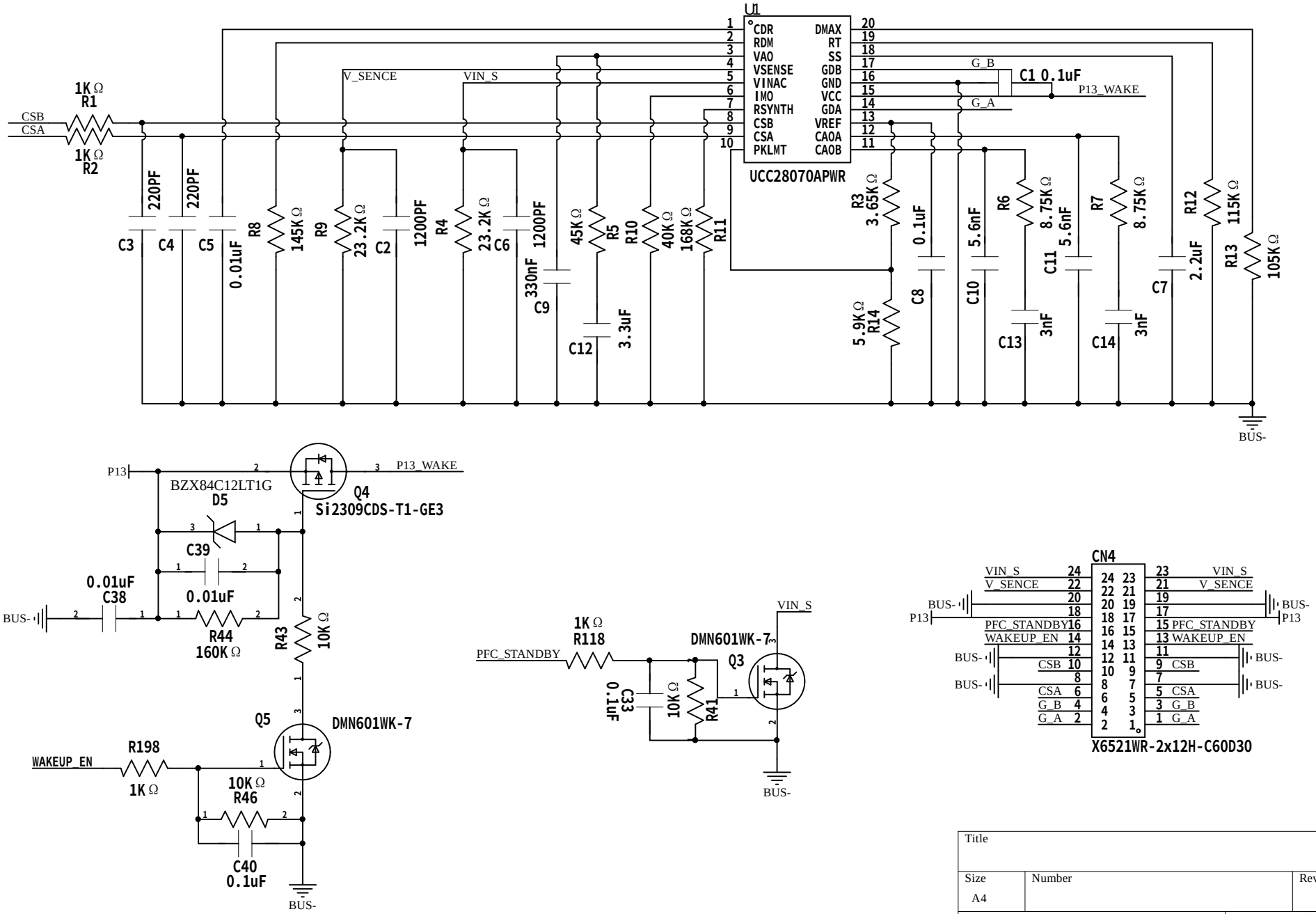

Title		
Size A4	Number	Revision
Date: 2025/2/26		Sheet of
File: D:\刘欢\..\PFC Control 03.SchDoc		Drawn By: