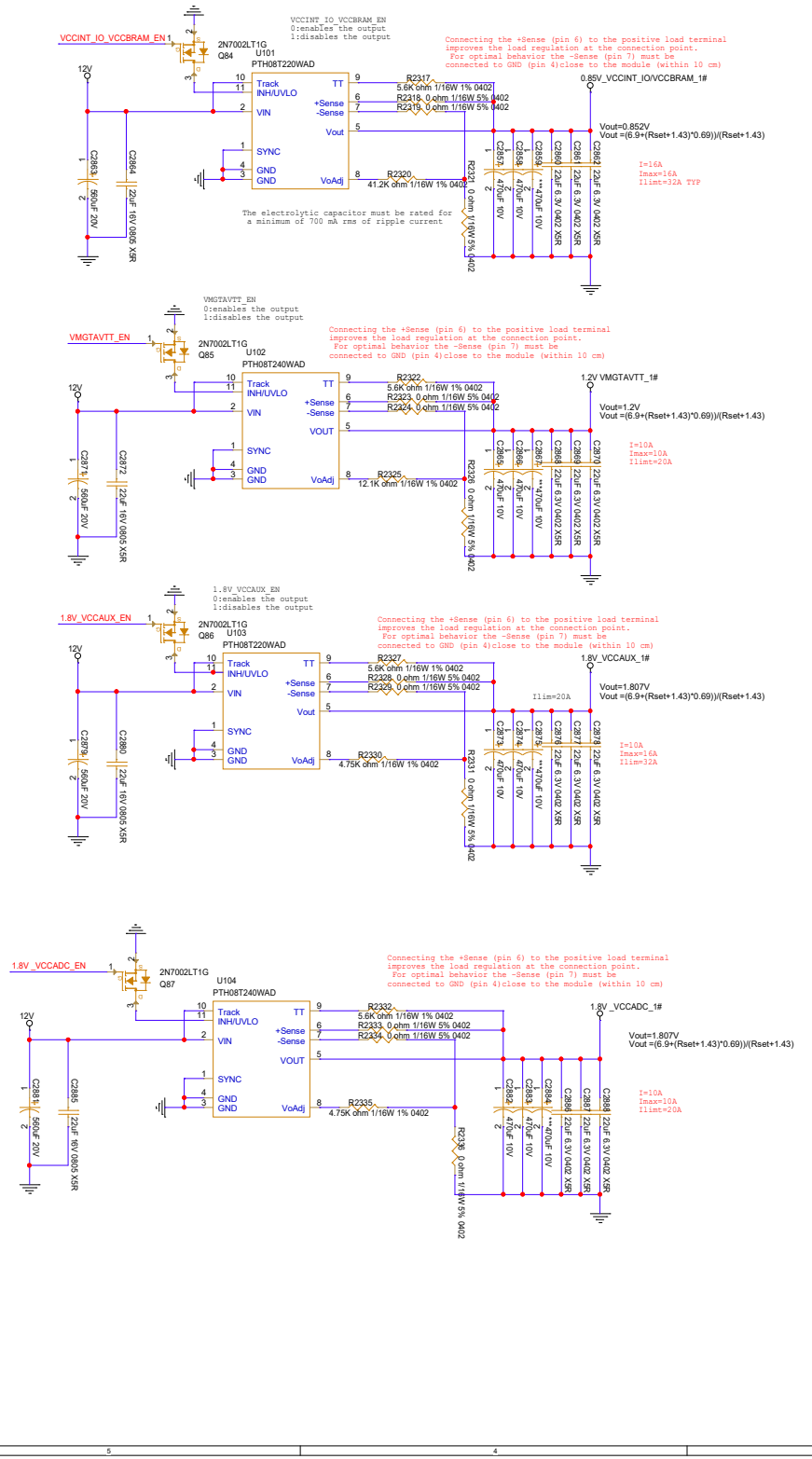
VCCINT_IO_VCCBRAM_EN
0:enables the output
1:disables the output
VCCINT_IO_VCCBRAM_EN
2N7002LT1G
Q84
U101
PTH08T220WAD
Track
INH/UVLO
VIN
SYNC
GND
GND
TT
+Sense
-Sense
Vout
VoAdj
12V
R2317
5.6K ohm 1/16W 1% 0402
R2318, 0 ohm 1/16W 5% 0402
R2319, 0 ohm 1/16W 5% 0402
R2320
41.2K ohm 1/16W 1% 0402
R2321, 0 ohm 1/16W 5% 0402
Connecting the +Sense (pin 6) to the positive load terminal
improves the load regulation at the connection point.
For optimal behavior the -Sense (pin 7) must be
connected to GND (pin 4)close to the module (within 10 cm)
0.85V_VCCINT_IO/VCCBRAM_1#
Vout=0.852V
Vout =(6.9+(Rset+1.43)*0.69))/(Rset+1.43)
I=16A
Imax=16A
Ilimt=32A TYP
The electrolytic capacitor must be rated for
a minimum of 700 mA rms of ripple current
C2863, 560uF 20V
C2864, 22uF 16V 0805 X5R
C2857, 470uF 10V
C2858, 470uF 10V
C2859, **470uF 10V
C2860, 22uF 6.3V 0402 X5R
C2861, 22uF 6.3V 0402 X5R
C2862, 22uF 6.3V 0402 X5R
VMGTAVTT_EN
0:enables the output
1:disables the output
VMGTAVTT_EN
2N7002LT1G
Q85
U102
PTH08T240WAD
R2322
5.6K ohm 1/16W 1% 0402
R2323, 0 ohm 1/16W 5% 0402
R2324, 0 ohm 1/16W 5% 0402
R2325
12.1K ohm 1/16W 1% 0402
R2326, 0 ohm 1/16W 5% 0402
Connecting the +Sense (pin 6) to the positive load terminal
improves the load regulation at the connection point.
For optimal behavior the -Sense (pin 7) must be
connected to GND (pin 4)close to the module (within 10 cm)
1.2V VMGTAVTT_1#
Vout=1.2V
Vout =(6.9+(Rset+1.43)*0.69))/(Rset+1.43)
I=10A
Imax=10A
Ilimt=20A
C2871, 560uF 20V
C2872, 22uF 16V 0805 X5R
C2865, 470uF 10V
C2866, 470uF 10V
C2867, **470uF 10V
C2868, 22uF 6.3V 0402 X5R
C2869, 22uF 6.3V 0402 X5R
C2870, 22uF 6.3V 0402 X5R
1.8V_VCCAUX_EN
0:enables the output
1:disables the output
1.8V_VCCAUX_EN
2N7002LT1G
Q86
U103
PTH08T220WAD
R2327
5.6K ohm 1/16W 1% 0402
R2328, 0 ohm 1/16W 5% 0402
R2329, 0 ohm 1/16W 5% 0402
R2330
4.75K ohm 1/16W 1% 0402
R2331 0 ohm 1/16W 5% 0402
Connecting the +Sense (pin 6) to the positive load terminal
improves the load regulation at the connection point.
For optimal behavior the -Sense (pin 7) must be
connected to GND (pin 4)close to the module (within 10 cm)
Ilim=20A
1.8V_VCCAUX_1#
Vout=1.807V
Vout =(6.9+(Rset+1.43)*0.69))/(Rset+1.43)
I=10A
Imax=16A
Ilim=32A
C2879, 560uF 20V
C2880, 22uF 16V 0805 X5R
C2873, 470uF 10V
C2874, 470uF 10V
C2875, **470uF 10V
C2876, 22uF 6.3V 0402 X5R
C2877, 22uF 6.3V 0402 X5R
C2878, 22uF 6.3V 0402 X5R
1.8V _VCCADC_EN
2N7002LT1G
Q87
U104
PTH08T240WAD
R2332
5.6K ohm 1/16W 1% 0402
R2333, 0 ohm 1/16W 5% 0402
R2334, 0 ohm 1/16W 5% 0402
R2335
4.75K ohm 1/16W 1% 0402
R2336, 0 ohm 1/16W 5% 0402
Connecting the +Sense (pin 6) to the positive load terminal
improves the load regulation at the connection point.
For optimal behavior the -Sense (pin 7) must be
connected to GND (pin 4)close to the module (within 10 cm)
1.8V _VCCADC_1#
Vout=1.807V
Vout =(6.9+(Rset+1.43)*0.69))/(Rset+1.43)
I=10A
Imax=10A
Ilimt=20A
C2881, 560uF 20V
C2885, 22uF 16V 0805 X5R
C2882, 470uF 10V
C2883, 470uF 10V
C2884, **470uF 10V
C2886, 22uF 6.3V 0402 X5R
C2887, 22uF 6.3V 0402 X5R
C2888, 22uF 6.3V 0402 X5R
3.3V_EN
2N7002LT1G
Q88
U105
PTH08T240WAD
R2337
5.6K ohm 1/16W 1% 0402
R2338, 0 ohm 1/16W 5% 0402
R2339, 0 ohm 1/16W 5% 0402
R2340
1.21K ohm 1/16W 1% 0402
R2341 0 ohm 1/16W 5% 0402
Connecting the +Sense (pin 6) to the positive load terminal
improves the load regulation at the connection point.
For optimal behavior the -Sense (pin 7) must be
connected to GND (pin 4)close to the module (within 10 cm)
3.3V
ETH_3.3V
Vout=3.304V
Vout =(6.9+(Rset+1.43)*0.69))/(Rset+1.43)
I=10A
Imax=10A
Ilimt=20A
C2889, 560uF 20V
C2890, 22uF 16V 0805 X5R
C2891, 470uF 10V
C2892, 470uF 10V
C2893, **470uF 10V
C2894, 22uF 6.3V 0402 X5R
C2895, 22uF 6.3V 0402 X5R
C2896, 22uF 6.3V 0402 X5R