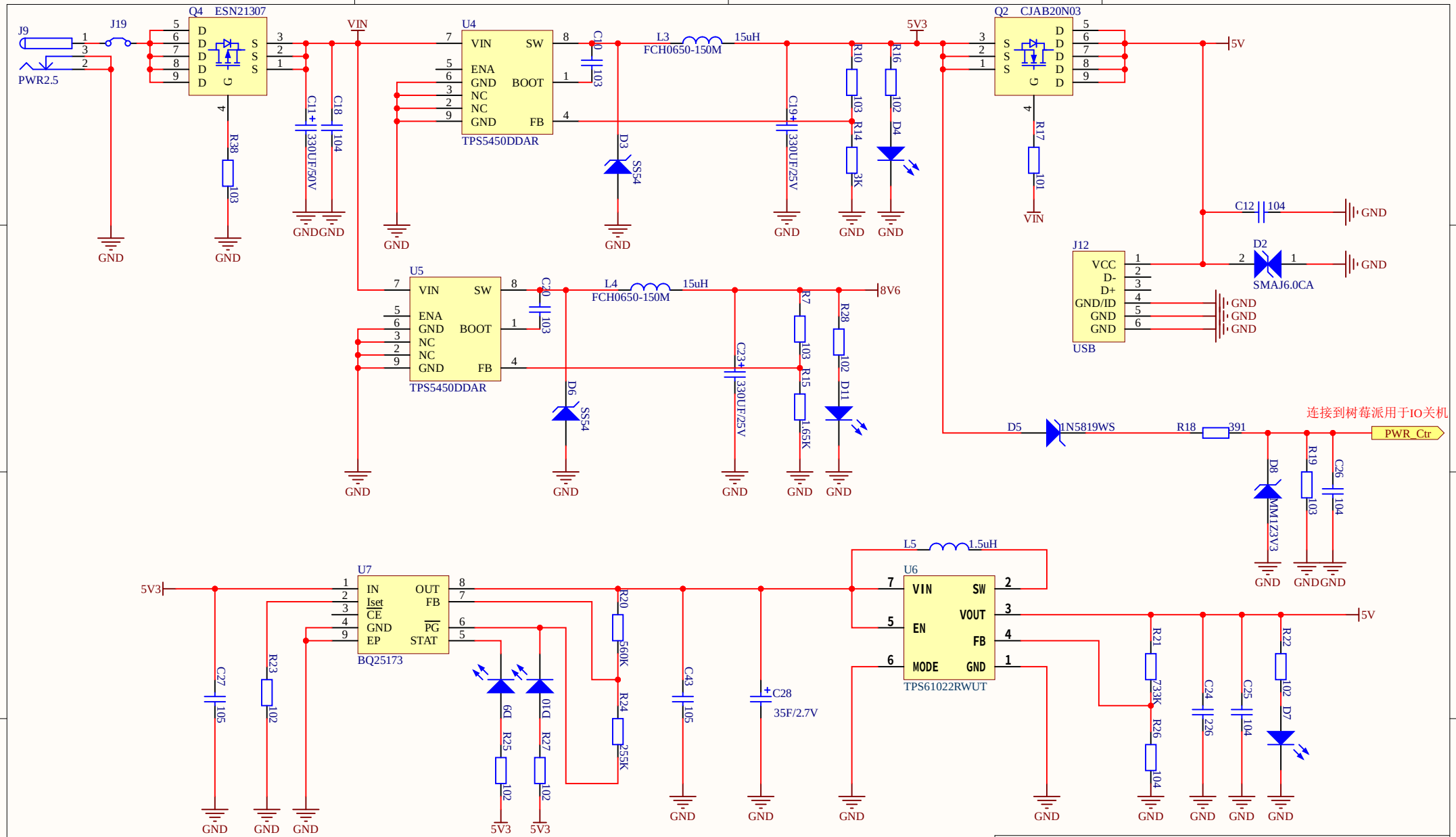
J9
PWR2.5
J19
Q4 ESN21307
VIN
U4
TPS5450DDAR
L3 FCH0650-150M 15uH
5V3
Q2 CJAB20N03
5V
C11 330UF/50V
C18 104
R38 103
C10 103
D3 SS54
C19 330UF/25V
R10 103
R14 3K
R16 102
D4
R17 101
C12 104
J12
USB
D2 SMAJ6.0CA
U5
TPS5450DDAR
L4 FCH0650-150M 15uH
8V6
C20 103
D6 SS54
C23 330UF/25V
R7 103
R15 1.65K
R28 102
D11
D5 1N5819WS
R18 391
连接到树莓派用于IO关机
PWR_Ctr
D8 MM1Z3V3
R19 103
C26 104
U7
BQ25173
C27 105
R23 102
R20 560K
R24 255K
D9
R25 102
D10
R27 102
C43 105
C28 35F/2.7V
L5 1.5uH
U6
TPS61022RWUT
R21 733K
R26 104
C24 226
C25 104
R22 102
D7
GND
Title
Size A4
Number
Revision
Date: 1/21/2025
Sheet of
File: E:\BaiduSyncdisk\..\Power.SchDoc
Drawn By: