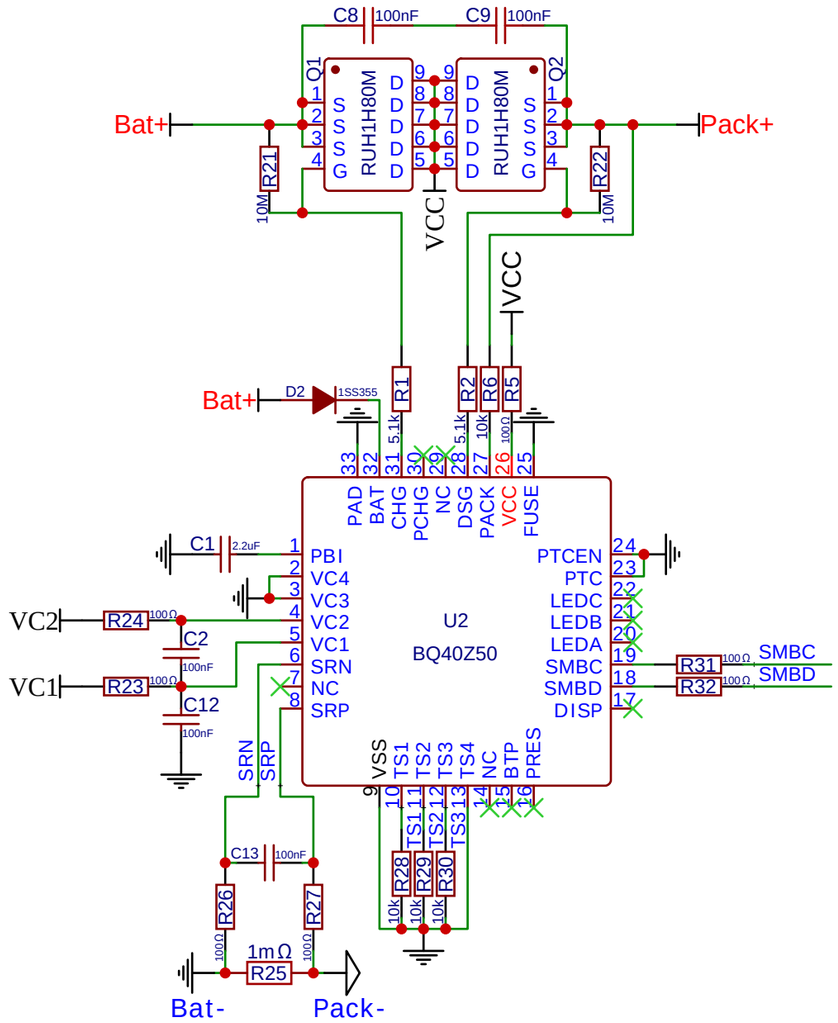

TITLE: Sheet_1		REV: 1.0
	Company: -	Sheet: 1/1
	Date: - Drawn By: -	