CVM Connector 1/3

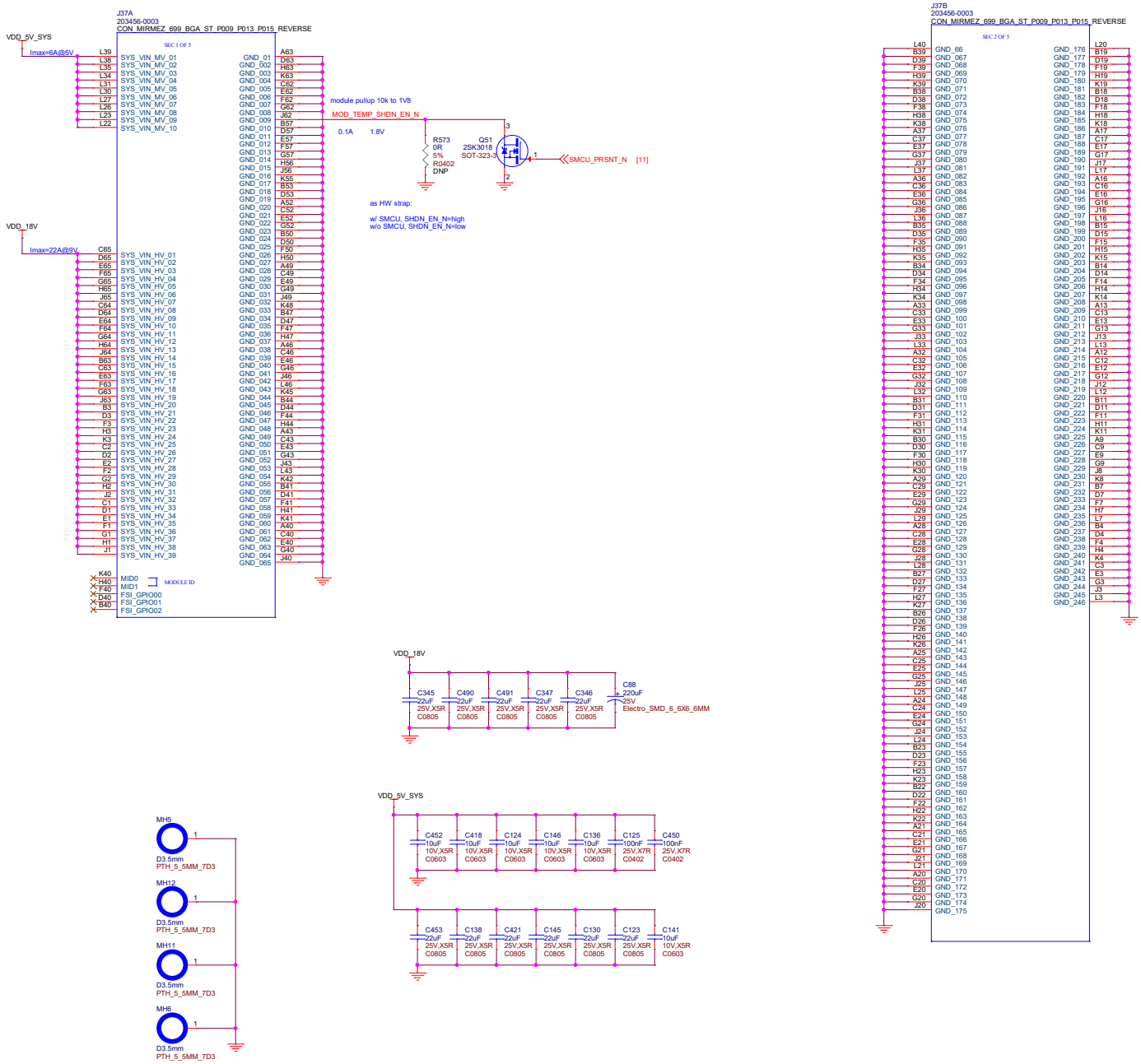

<Variant Name>

seeed studio https://www.seeedstudio.com

Title: TI_LM5148		
Size: A2	Document Number: 04 CVM Connector 1/3	Rev: V1.0
Draw By: Seeed	Date: Friday, January 16, 2026	Sheet: 4 of 33

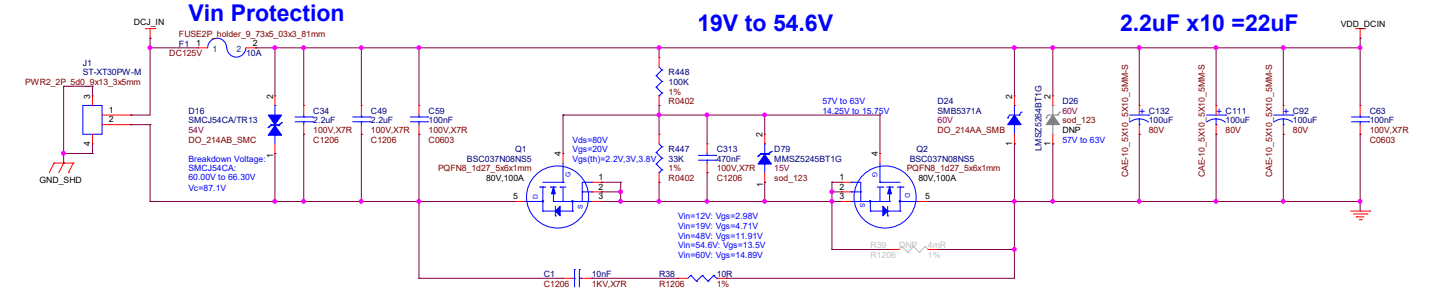
Vin Protection
19V to 54.6V
2.2uF x10 =22uF
DCJ_IN
FUSE2P_holder_9_73x5_03x3_81mm
F1 1 2 10A
DC125V
J1
ST-XT30PW-M
PWR2_2P_5d0_9x13_3x5mm
GND_SHD
D16
SMCJ54CA/TR13
54V
DO_214AB_SMC
Breakdown Voltage:
SMCJ54CA:
60.00V to 66.30V
Vc=87.1V
C34
2.2uF
100V,X7R
C1206
C49
2.2uF
100V,X7R
C1206
C59
100nF
100V,X7R
C0603
Q1
BSC037N08NS5
PQFN8_1d27_5x6x1mm
80V,100A
Vds=80V
Vgs=20V
Vgs(th)=2.2V,3V,3.8V
R448
100K
1%
R0402
R447
33K
1%
R0402
C313
470nF
100V,X7R
C1206
D79
MMSZ5245BT1G
15V
sod_123
57V to 63V
14.25V to 15.75V
Q2
BSC037N08NS5
PQFN8_1d27_5x6x1mm
80V,100A
Vin=12V: Vgs=2.98V
Vin=19V: Vgs=4.71V
Vin=48V: Vgs=11.91V
Vin=54.6V: Vgs=13.5V
Vin=60V: Vgs=14.89V
R39 DNP 4mR
R1206 1%
C1 10nF
C1206 1KV,X7R
R38 10R
R1206 1%
D24
SMBS371A
60V
DO_214AA_SMB
LMSZ5284BT1G
D26
60V
sod_123
DNP
57V to 63V
CAE-10_5X10_5X10_5MM-S
C132
100uF
80V
C111
100uF
80V
C92
100uF
80V
C63
100nF
100V,X7R
C0603
VDD_DCIN

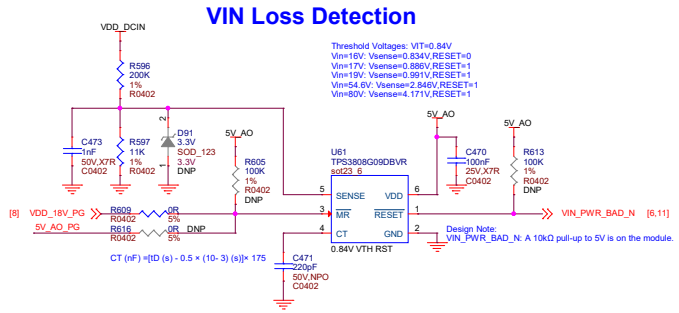
VIN Loss Detection
VDD_DCIN
R596
200K
1%
R0402
C473
1nF
50V,X7R
C0402
R597
11K
1%
R0402
D91
3.3V
SOD_123
3.3V
DNP
5V_AO
R605
100K
1%
R0402
DNP
Threshold Voltages: VIT=0.84V
Vin=16V: Vsense=0.834V,RESET=0
Vin=17V: Vsense=0.886V,RESET=1
Vin=19V: Vsense=0.991V,RESET=1
Vin=54.6V: Vsense=2.846V,RESET=1
Vin=60V: Vsense=4.171V,RESET=1
U61
TPS3808G09DBVR
sot23_6
SENSE
VDD
MR
RESET
CT
GND
0.84V VTH RST
C470
100nF
25V,X7R
C0402
R613
100K
1%
R0402
DNP
[8] VDD_18V_PG
5V_AO_PG
R609
R0402
0R
5%
R616
R0402
0R DNP
5%
CT (nF) =[tD (s) - 0.5 × (10- 3) (s)]× 175
C471
220pF
50V,NPO
C0402
Design Note:
VIN_PWR_BAD_N: A 10kΩ pull-up to 5V is on the module.
VIN_PWR_BAD_N [6,11]

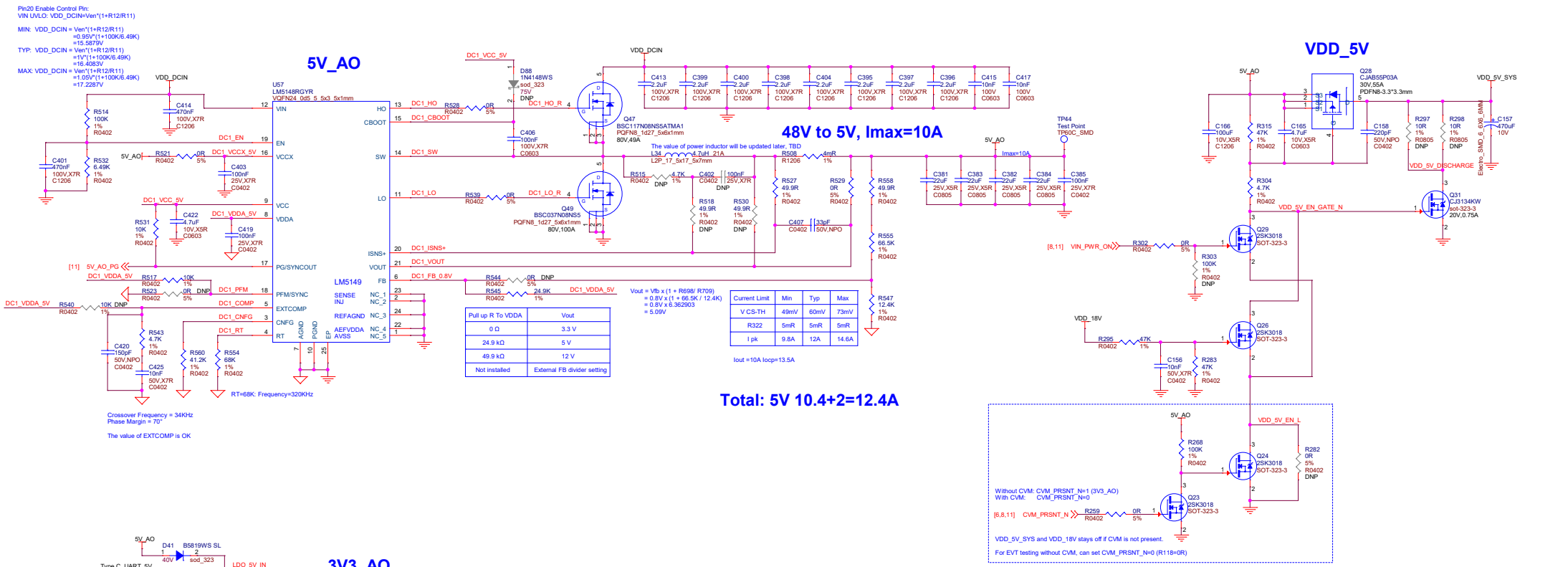
Pin20 Enable Control Pin:
VIN UVLO: VDD_DCIN=Ven*(1+R12/R11)
MIN: VDD_DCIN = Ven*(1+R12/R11)
=0.95V*(1+100K/6.49K)
=15.5875V
TYP: VDD_DCIN = Ven*(1+R12/R11)
=1V*(1+100K/6.49K)
=16.4083V
MAX: VDD_DCIN = Ven*(1+R12/R11)
=1.05V*(1+100K/6.49K)
=17.2287V
5V_AO
VDD_DCIN
U57
LM5148RGYR
VQFN24_0d5_5_5x3_5x1mm
VIN
EN
VCCX
VCC
VDDA
PG/SYNCOUT
PFM/SYNC
EXTCOMP
CNFG
RT
HO
CBOOT
SW
LO
ISNS+
VOUT
FB
SENSE
INJ
REFAGND
AEFVDDA
AVSS
NC_1
NC_2
NC_3
NC_4
NC_5
AGND
PGND
EP
LM5149
R514
100K
1%
R0402
C414
470nF
100V,X7R
C1206
C401
470nF
100V,X7R
C1206
R532
6.49K
1%
R0402
R521
R0402
0R
5%
DC1_EN
DC1_VCCX_5V
C403
100nF
25V,X7R
C0402
DC1_VCC_5V
R531
10K
1%
R0402
C422
4.7uF
10V,X5R
C0603
DC1_VDDA_5V
C419
100nF
25V,X7R
C0402
[11] 5V_AO_PG
DC1_VDDA_5V
R517
R0402
10K
1%
R523
R0402
0R DNP
5%
DC1_PFM
DC1_COMP
DC1_CNFG
DC1_RT
R540
R0402
10K DNP
1%
R543
4.7K
1%
R0402
C420
150pF
50V,NPO
C0402
C425
10nF
50V,X7R
C0402
R560
41.2K
1%
R0402
R554
68K
1%
R0402
RT=68K: Frequency=320KHz
Crossover Frequency = 34KHz
Phase Margin = 70°
The value of EXTCOMP is OK
DC1_VCC_5V
D88
1N4148WS
sod_323
75V
DNP
DC1_HO_R
R528
R0402
0R
5%
DC1_HO
DC1_CBOOT
C406
100nF
100V,X7R
C0603
DC1_SW
DC1_LO
R539
R0402
0R
5%
DC1_LO_R
DC1_ISNS+
DC1_VOUT
DC1_FB_0.8V
R544
R0402
0R
5%
DNP
R545
R0402
24.9K
1%
DC1_VDDA_5V
Pull up R To VDDA | Vout
0 Ω | 3.3 V
24.9 kΩ | 5 V
49.9 kΩ | 12 V
Not installed | External FB divider setting
VDD_DCIN
C413
2.2uF
100V,X7R
C1206
C399
2.2uF
100V,X7R
C1206
C400
2.2uF
100V,X7R
C1206
C398
2.2uF
100V,X7R
C1206
C404
2.2uF
100V,X7R
C1206
C395
2.2uF
100V,X7R
C1206
C397
2.2uF
100V,X7R
C1206
C396
2.2uF
100V,X7R
C1206
C415
10nF
100V
C0603
C417
10nF
100V
C0603
Q47
BSC117N08NSSATMA1
PQFN8_1d27_5x6x1mm
80V,49A
Q49
BSC037N08NS5
PQFN8_1d27_5x6x1mm
80V,100A
48V to 5V, Imax=10A
The value of power inductor will be updated later, TBD
L34
L2P_17_5x17_5x7mm
4.7uH_21A
R515
R0402
DNP
4.7K
1%
C402
C0402
100nF
25V,X7R
DNP
R508
R1206
4mR
1%
R518
49.9R
1%
R0402
DNP
R530
49.9R
1%
R0402
DNP
R527
49.9R
1%
R0402
R529
0R
5%
R0402
C407
C0402
33pF
50V,NPO
R558
49.9R
1%
R0402
R555
66.5K
1%
R0402
R547
12.4K
1%
R0402
Vout = Vfb x (1 + R698/ R709)
= 0.8V x (1 + 66.5K / 12.4K)
= 0.8V x 6.362903
= 5.09V
Current Limit | Min | Typ | Max
V CS-TH | 49mV | 60mV | 73mV
R322 | 5mR | 5mR | 5mR
I pk | 9.8A | 12A | 14.6A
Iout =10A Iocp=13.5A
5V_AO
Imax=10A
TP44
Test Point
TP60C_SMD
C381
22uF
25V,X5R
C0805
C383
22uF
25V,X5R
C0805
C382
22uF
25V,X5R
C0805
C384
22uF
25V,X5R
C0805
C385
100nF
25V,X7R
C0402
Total: 5V 10.4+2=12.4A
VDD_5V
5V_AO
Q28
CJAB55P03A
30V,55A
PDFN8-3.3*3.3mm
VDD_5V_SYS
C166
100uF
10V,X5R
C1206
R315
47K
1%
R0402
C165
4.7uF
10V,X5R
C0603
C158
220pF
50V,NPO
C0402
R297
10R
1%
R0805
DNP
R298
10R
1%
R0805
DNP
C157
470uF
10V
Electro_SMD_5.0X5.6MM
VDD_5V_DISCHARGE
R304
4.7K
1%
R0402
VDD_5V_EN_GATE_N
Q31
CJ3134KW
sot-323-3
20V,0.75A
[8,11] VIN_PWR_ON
R302
R0402
0R
5%
Q29
2SK3018
SOT-323-3
R303
100K
1%
R0402
DNP
VDD_18V
R295
R0402
47K
1%
Q26
2SK3018
SOT-323-3
C156
10nF
50V,X7R
C0402
R283
47K
1%
R0402
5V_AO
R268
100K
1%
R0402
VDD_5V_EN_L
Q24
2SK3018
SOT-323-3
R282
0R
5%
R0402
DNP
Q23
2SK3018
SOT-323-3
Without CVM: CVM_PRSNT_N=1 (3V3_AO)
With CVM: CVM_PRSNT_N=0
[6,8,11] CVM_PRSNT_N
R259
R0402
0R
5%
VDD_5V_SYS and VDD_18V stays off if CVM is not present.
For EVT testing without CVM, can set CVM_PRSNT_N=0 (R118=0R)

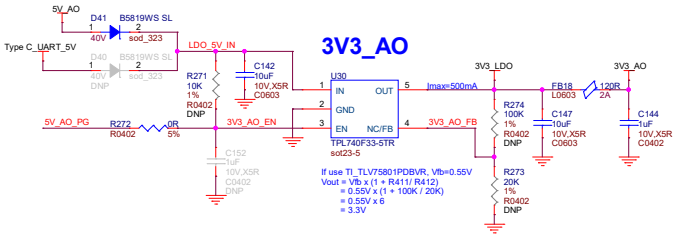
3V3_AO
5V_AO
D41
B5819WS SL
40V
sod_323
Type C_UART_5V
D40
B5819WS SL
40V
sod_323
DNP
LDO_5V_IN
C142
10uF
10V,X5R
C0603
R271
10K
1%
R0402
DNP
5V_AO_PG
R272
R0402
0R
5%
3V3_AO_EN
C152
1uF
10V,X5R
C0402
DNP
U30
IN
OUT
GND
EN
NC/FB
TPL740F33-5TR
sot23-5
Imax=500mA
3V3_AO_FB
If use TI_TLV75801PDBVR, Vfb=0.55V
Vout = Vfb x (1 + R411/ R412)
= 0.55V x (1 + 100K / 20K)
= 0.55V x 6
= 3.3V
3V3_LDO
R274
100K
1%
R0402
DNP
R273
20K
1%
R0402
DNP
FB18
L0603
120R
2A
C147
10uF
10V,X5R
C0603
3V3_AO
C144
1uF
10V,X5R
C0402

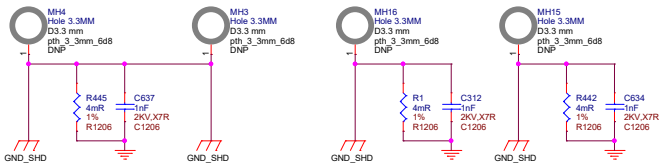
MH4
Hole 3.3MM
D3.3 mm
pth_3_3mm_6d8
DNP
MH3
Hole 3.3MM
D3.3 mm
pth_3_3mm_6d8
DNP
MH16
Hole 3.3MM
D3.3 mm
pth_3_3mm_6d8
DNP
MH15
Hole 3.3MM
D3.3 mm
pth_3_3mm_6d8
DNP
R445
4mR
1%
R1206
C637
1nF
2KV,X7R
C1206
R1
4mR
1%
R1206
C312
1nF
2KV,X7R
C1206
R442
4mR
1%
R1206
C634
1nF
2KV,X7R
C1206
GND_SHD

VDD_VIN_HV

Input Control Sequence:

Power On : MV -> HV

Power Off: HV -> MV

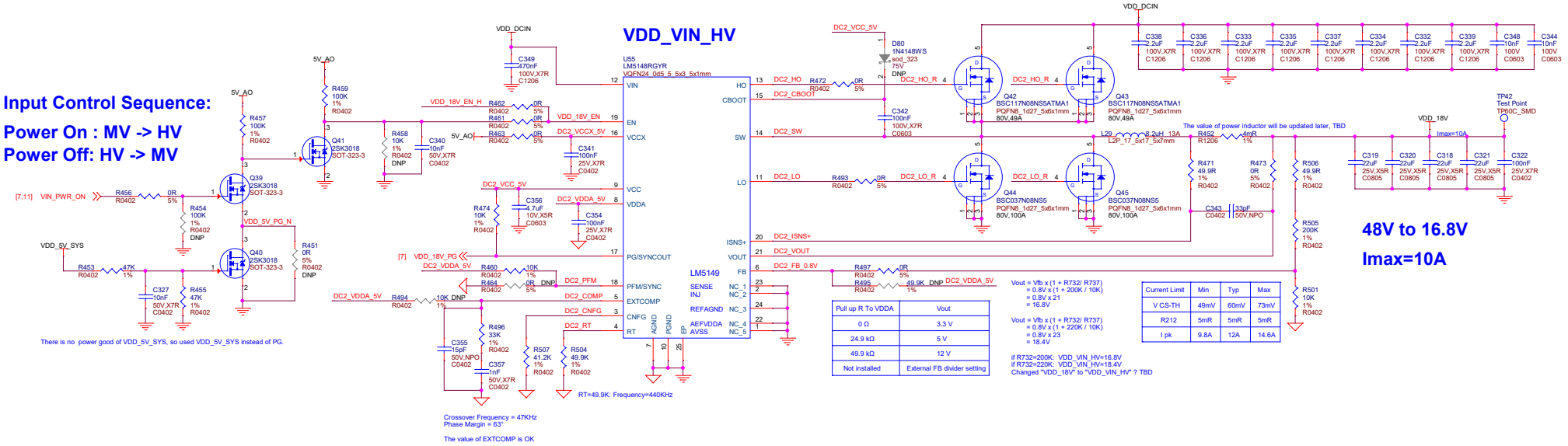

Pull up R To VDDA	Vout
0 Ω	3.3 V
24.9 kΩ	5 V
49.9 kΩ	12 V
Not installed	External FB divider setting

Current Limit	Min	Typ	Max
V CS-TH	49mV	60mV	73mV
R212	5mR	5mR	5mR
I pk	9.8A	12A	14.6A

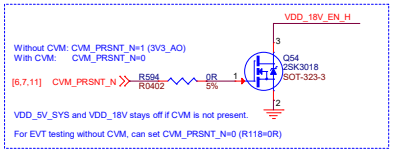

Discharge

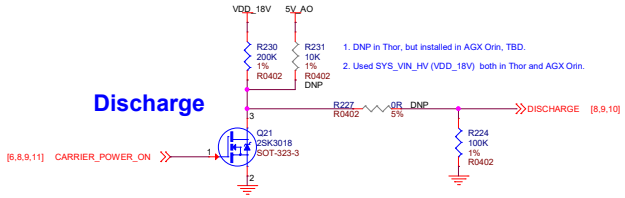

VDD_1V8

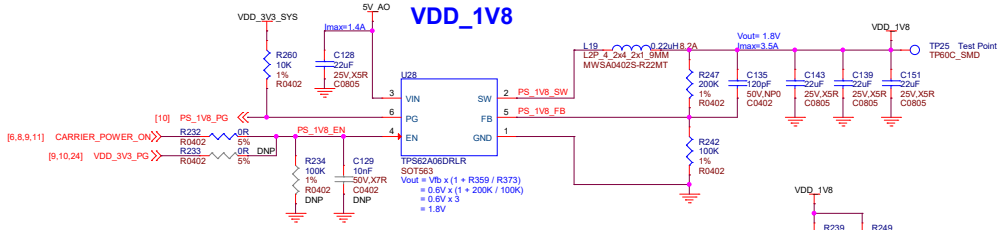

VDD_1V8 Discharge

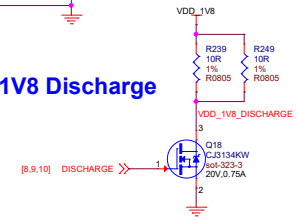

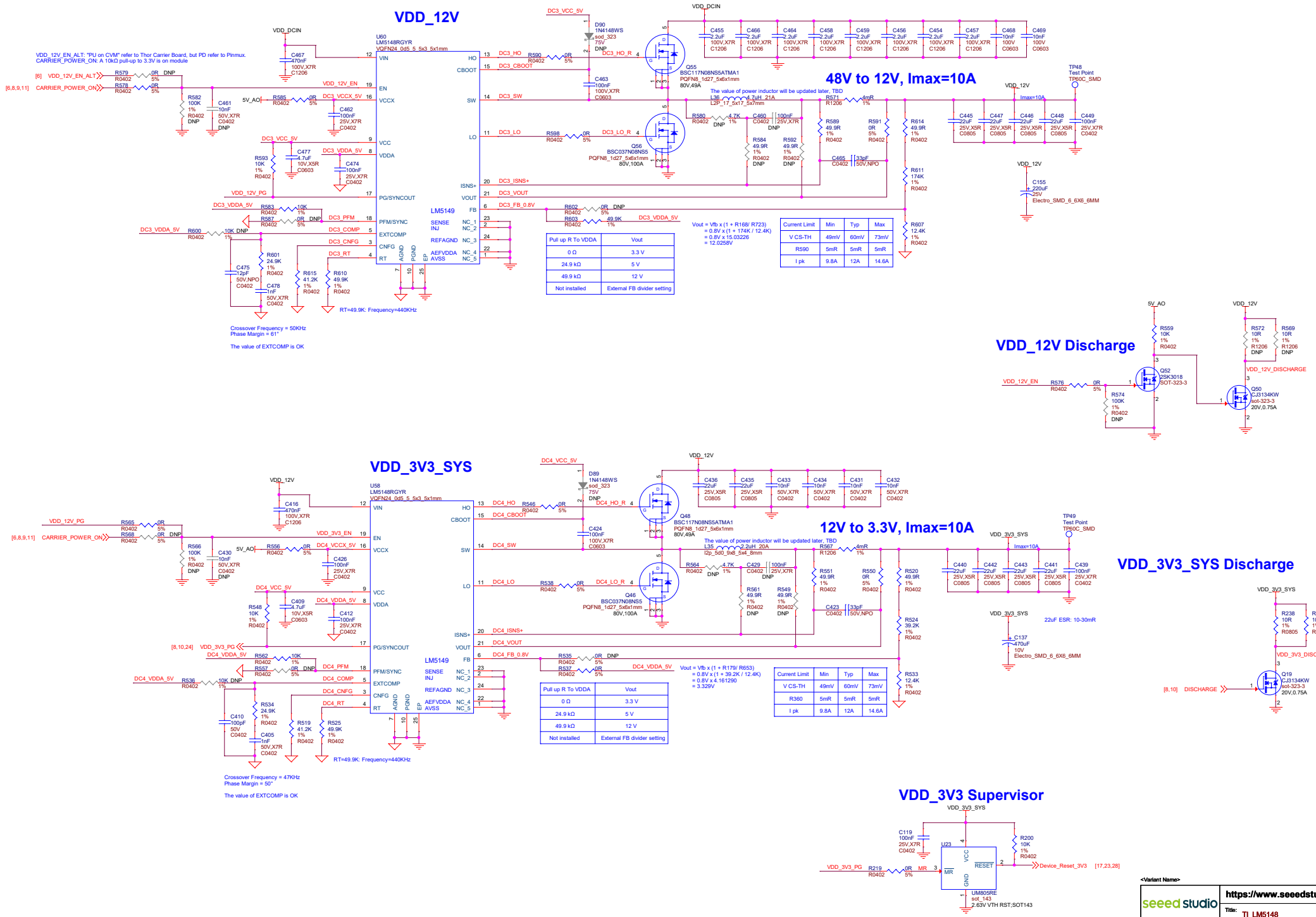
VDD_12V
U60
LM5148RGYR
VQFN24_0d5_5_5x3_5x1mm
LM5149
VDD_DCIN
VDD_12V_EN_ALT: "PU on CVM" refer to Thor Carrier Board, but PD refer to Pinmux.
CARRIER_POWER_ON: A 10kΩ pull-up to 3.3V is on module
[6] VDD_12V_EN_ALT
[6,8,9,11] CARRIER_POWER_ON
VDD_12V_EN
5V_AO
DC3_VCCX_5V
DC3_VCC_5V
DC3_VDDA_5V
VDD_12V_PG
DC3_VDDA_5V
DC3_COMP
DC3_CNFG
DC3_RT
DC3_PFM
DC3_HO
DC3_CBOOT
DC3_SW
DC3_LO
DC3_ISNS+
DC3_VOUT
DC3_FB_0.8V
DC3_HO_R
DC3_LO_R
DC3_VCC_5V
VIN
EN
VCCX
VCC
VDDA
PG/SYNCOUT
PFM/SYNC
EXTCOMP
CNFG
RT
AGND
PGND
EP
HO
CBOOT
SW
LO
ISNS+
VOUT
FB
SENSE
INJ
REFAGND
AEFVDDA
AVSS
NC_1
NC_2
NC_3
NC_4
NC_5
RT=49.9K: Frequency=440KHz
Crossover Frequency = 50KHz
Phase Margin = 61°
The value of EXTCOMP is OK
48V to 12V, Imax=10A
The value of power inductor will be updated later, TBD
L36 4.7uH_21A
L2P_17_5x17_5x7mm
Q55
BSC117N08NS5ATMA1
PQFN8_1d27_5x6x1mm
80V,49A
Q56
BSC037N08NS5
PQFN8_1d27_5x6x1mm
80V,100A
TP48
Test Point
TP50C_SMD
Imax=10A
Vout = Vfb x (1 + R168/ R723)
= 0.8V x (1 + 174K / 12.4K)
= 0.8V x 15.03226
= 12.0258V
Pull up R To VDDA | Vout
0 Ω | 3.3 V
24.9 kΩ | 5 V
49.9 kΩ | 12 V
Not installed | External FB divider setting
Current Limit | Min | Typ | Max
V CS-TH | 49mV | 60mV | 73mV
R590 | 5mR | 5mR | 5mR
I pk | 9.8A | 12A | 14.6A
VDD_12V Discharge
VDD_12V_EN
VDD_12V_DISCHARGE
Q52
2SK3018
SOT-323-3
Q50
CJ3134KW
sot-323-3
20V,0.75A
VDD_3V3_SYS
U58
LM5148RGYR
VQFN24_0d5_5_5x3_5x1mm
LM5149
VDD_3V3_EN
DC4_VCC_5V
DC4_VDDA_5V
DC4_PFM
DC4_COMP
DC4_CNFG
DC4_RT
DC4_HO
DC4_CBOOT
DC4_SW
DC4_LO
DC4_ISNS+
DC4_VOUT
DC4_FB_0.8V
DC4_HO_R
DC4_LO_R
[8,10,24] VDD_3V3_PG
12V to 3.3V, Imax=10A
The value of power inductor will be updated later, TBD
L35 2.2uH 20A
l2p_5d0_9x8_5x4_8mm
Q48
BSC117N08NS5ATMA1
PQFN8_1d27_5x6x1mm
80V,49A
Q46
BSC037N08NS5
PQFN8_1d27_5x6x1mm
80V,100A
TP49
Test Point
TP60C_SMD
Imax=10A
22uF ESR: 10-30mR
Vout = Vfb x (1 + R179/ R653)
= 0.8V x (1 + 39.2K / 12.4K)
= 0.8V x 4.161290
= 3.329V
Pull up R To VDDA | Vout
0 Ω | 3.3 V
24.9 kΩ | 5 V
49.9 kΩ | 12 V
Not installed | External FB divider setting
Current Limit | Min | Typ | Max
V CS-TH | 49mV | 60mV | 73mV
R360 | 5mR | 5mR | 5mR
I pk | 9.8A | 12A | 14.6A
VDD_3V3_SYS Discharge
VDD_3V3_DISCHARGE
[8,10] DISCHARGE
Q19
CJ3134KW
sot-323-3
20V,0.75A
VDD_3V3 Supervisor
VDD_3V3_PG
U23
UM805RE
sot_143
2.63V VTH RST;SOT143
MR
VCC
GND
RESET
Device_Reset_3V3 [17,23,28]
<Variant Name>
seeed studio
https://www.seeedstudio.com
Title: TI_LM5148
Size: A2
Document Number: 09 Power 12V, 3V3
Rev: V1.0
Draw By: Seeed
Date: Friday, January 16, 2026
Sheet: 9 of 33

USB3.2 HUB Power

USB Total: 5V 5.09A

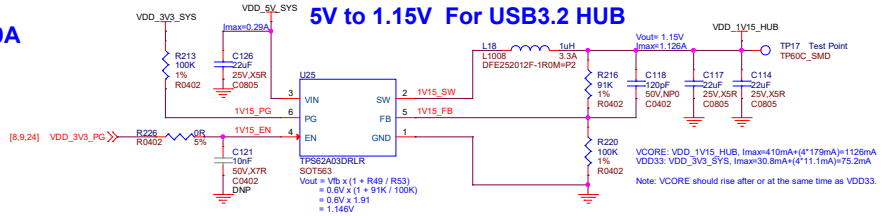

VDD_1V15_HUB Discharge

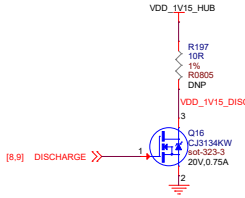

Ethernet Total: 5V 3.31A

10G Ethernet PHY Power

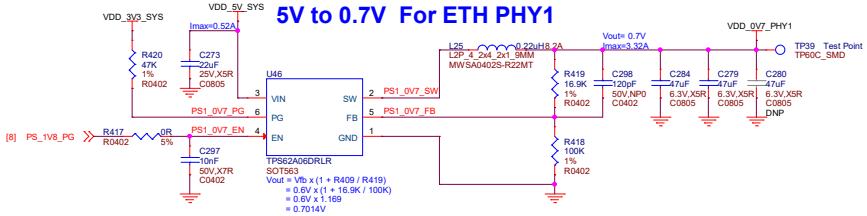

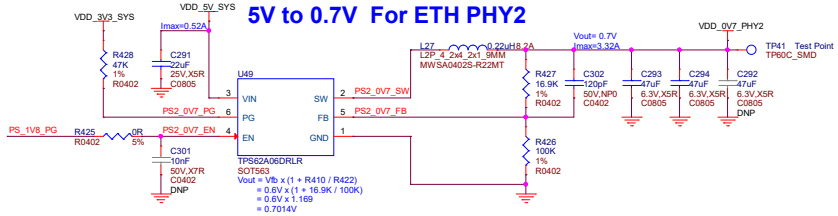

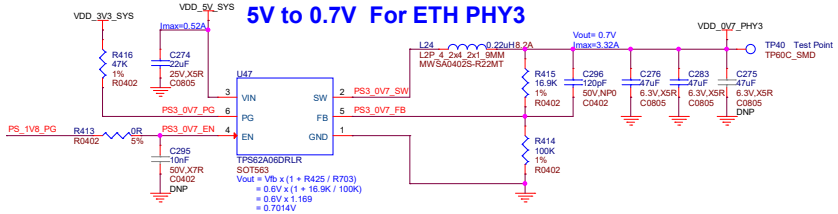

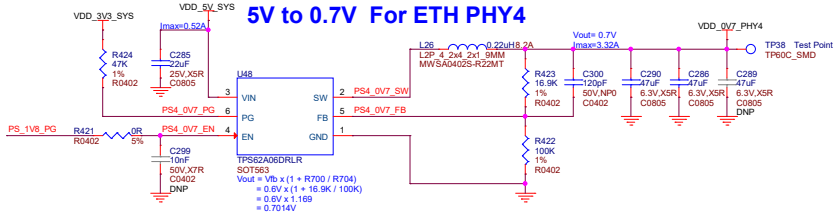

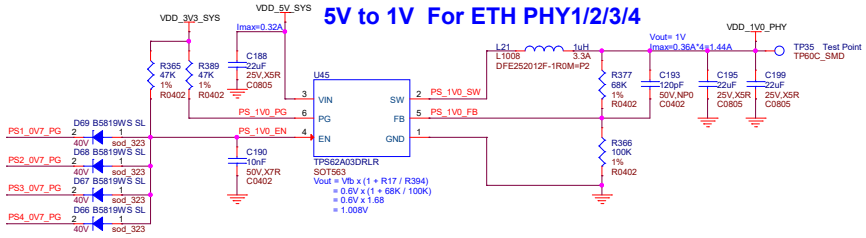

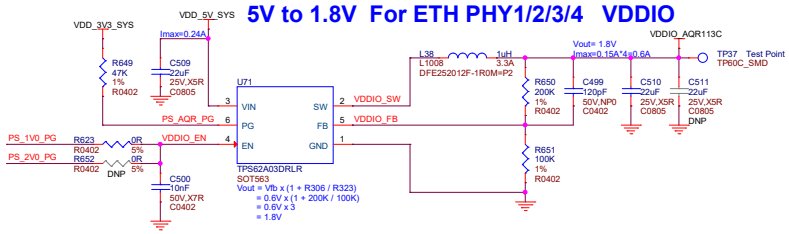

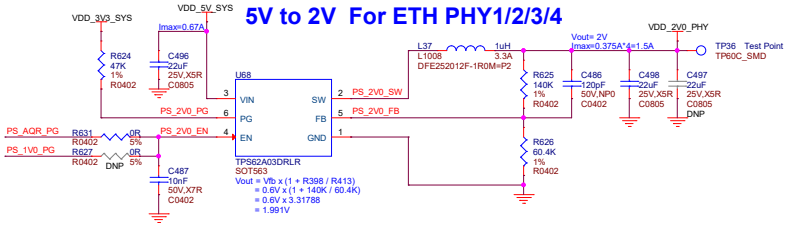

PHY AQR113C Power-Up Sequence Requires:

If VDD_IO is 1.8V: VDD -> 1.0V -> VDD_IO -> 2.0V, Default.

If VDD_IO is 3.3V: VDD -> 1.0V -> 2.0V -> VDD_IO.