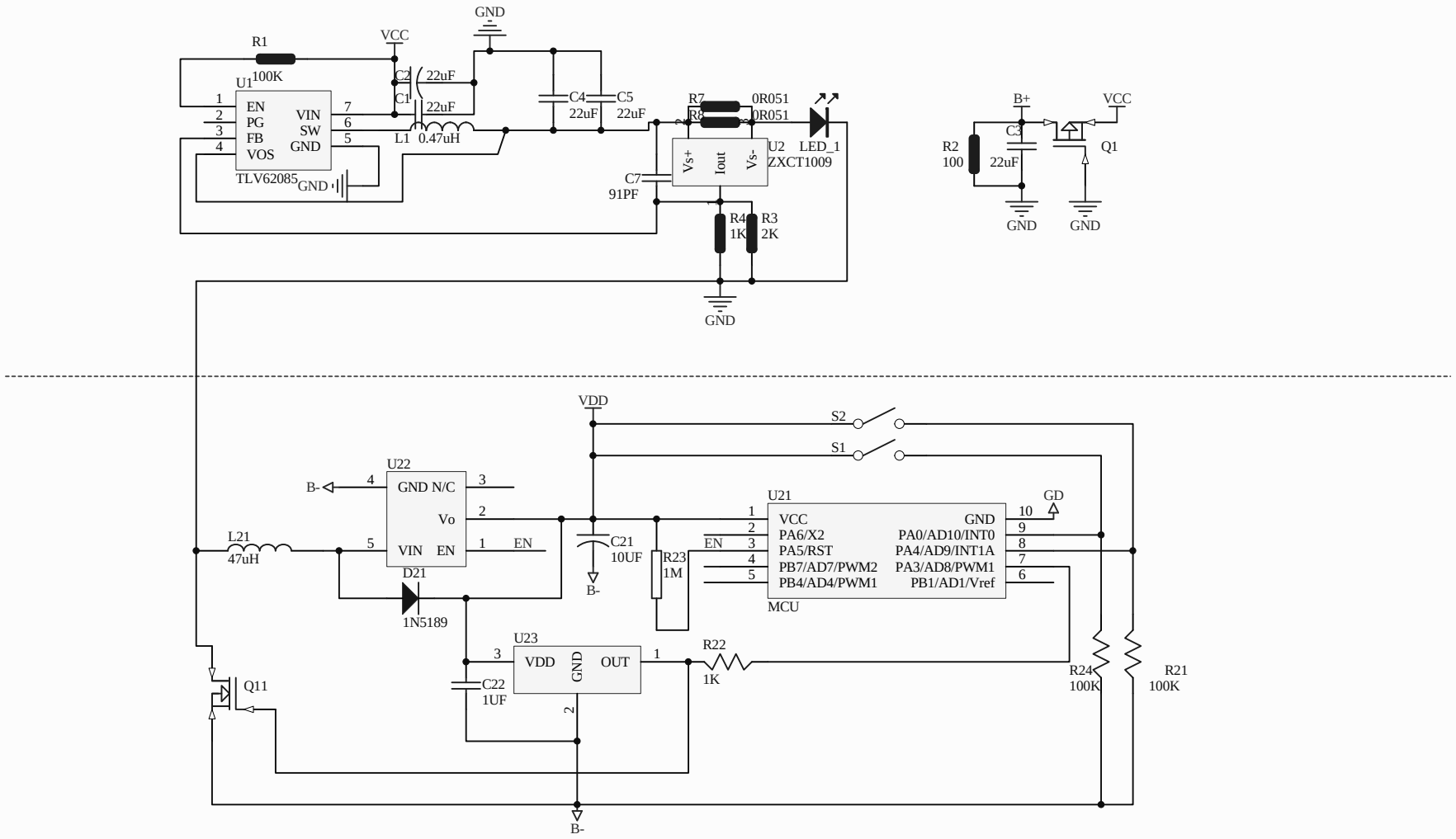

Title		
Size A4	Number	Revision
Date: 2018-9-26		Sheet of
File: E:\11项目资料明细\..\TA30-TI.SchDoc		Drawn By: