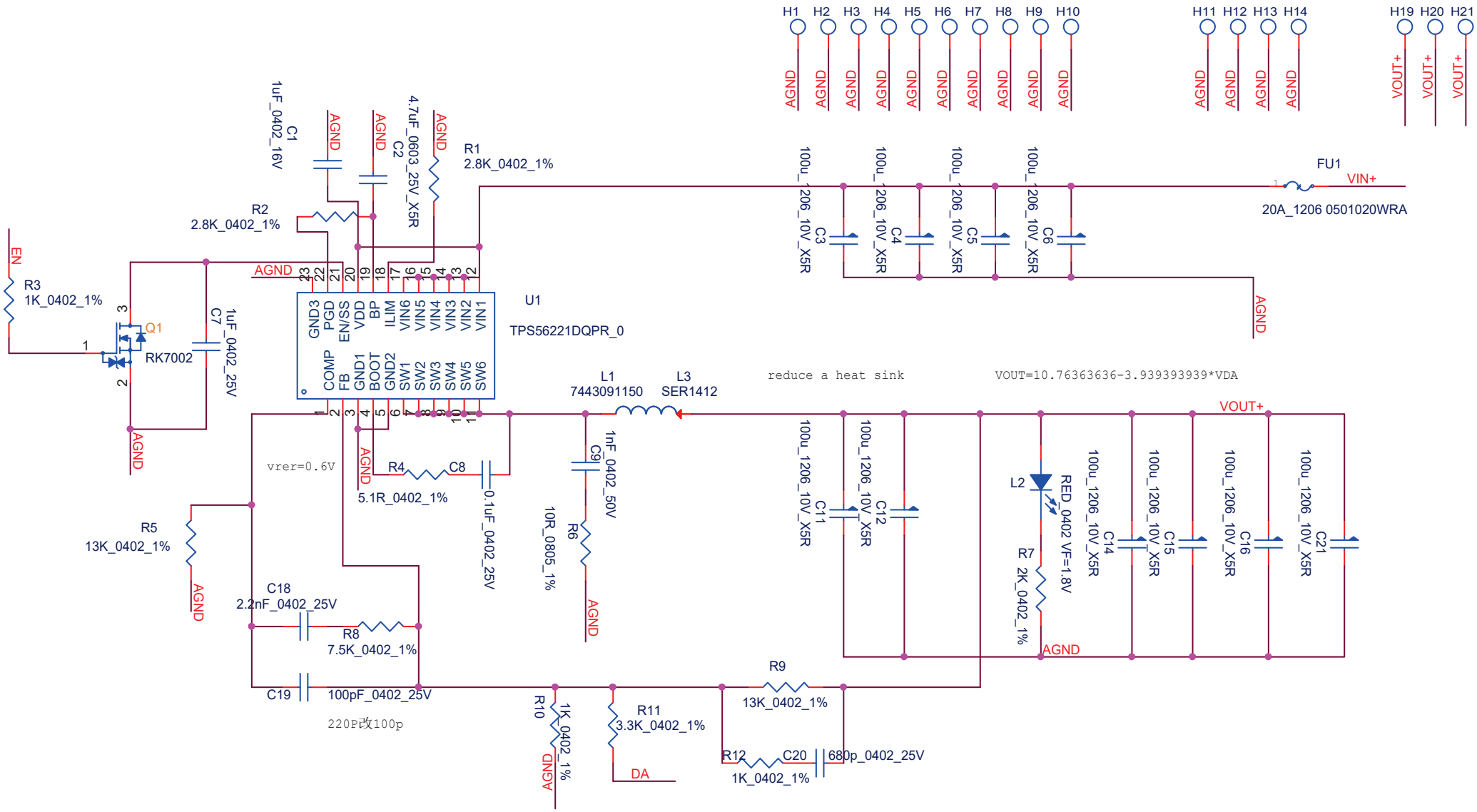
H1 H2 H3 H4 H5 H6 H7 H8 H9 H10
H11 H12 H13 H14
H19 H20 H21
AGND
VOUT+
FU1
VIN+
20A_1206 0501020WRA
C3 100u_1206_10V_X5R
C4 100u_1206_10V_X5R
C5 100u_1206_10V_X5R
C6 100u_1206_10V_X5R
C1 1uF_0402_16V
C2 4.7uF_0603_25V_X5R
R1 2.8K_0402_1%
R2 2.8K_0402_1%
R3 1K_0402_1%
EN
Q1 RK7002
C7 1uF_0402_25V
U1
TPS56221DQPR_0
GND3 PGD EN/SS VDD BP ILIM VIN6 VIN5 VIN4 VIN3 VIN2 VIN1
COMP FB GND1 BOOT GND2 SW1 SW2 SW3 SW4 SW5 SW6
L1 7443091150
L3 SER1412
reduce a heat sink
VOUT=10.76363636-3.939393939*VDA
vrer=0.6V
R4 5.1R_0402_1%
C8 0.1uF_0402_25V
C9 1nF_0402_50V
R6 10R_0805_1%
R5 13K_0402_1%
C18 2.2nF_0402_25V
R8 7.5K_0402_1%
C19 100pF_0402_25V
220P改100p
C11 100u_1206_10V_X5R
C12 100u_1206_10V_X5R
L2 RED_0402 VF=1.8V
R7 2K_0402_1%
C14 100u_1206_10V_X5R
C15 100u_1206_10V_X5R
C16 100u_1206_10V_X5R
C21 100u_1206_10V_X5R
R9 13K_0402_1%
R10 1K_0402_1%
R11 3.3K_0402_1%
R12 1K_0402_1%
C20 680p_0402_25V
DA