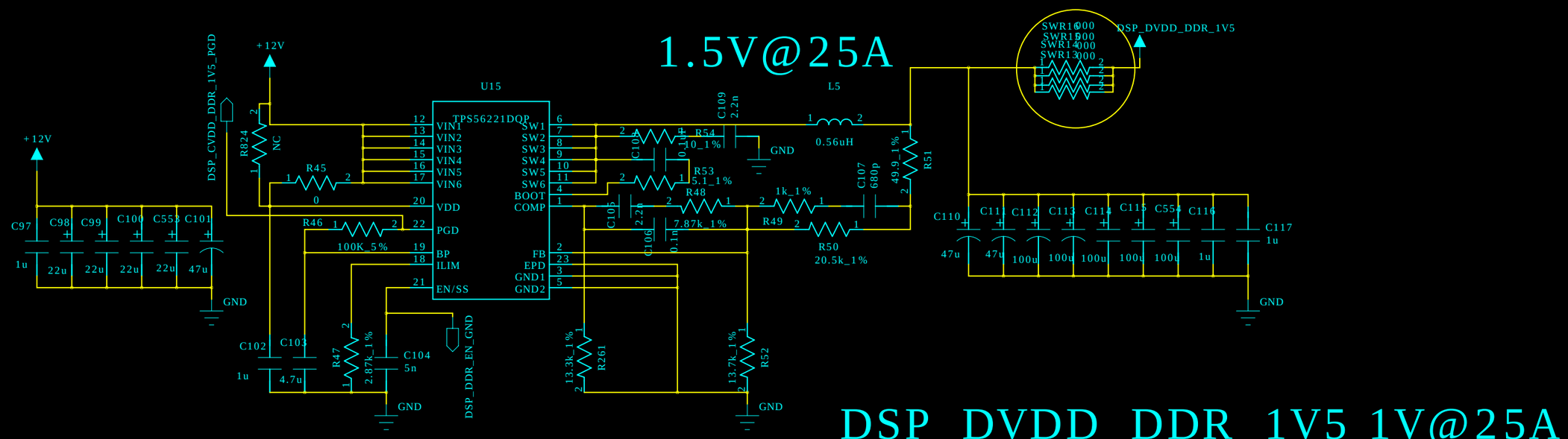
1.5V@25A
U15
TPS56221DQP
VIN1
VIN2
VIN3
VIN4
VIN5
VIN6
VDD
PGD
BP
ILIM
EN/SS
SW1
SW2
SW3
SW4
SW5
SW6
BOOT
COMP
FB
EPD
GND1
GND2
L5
0.56uH
DSP_DVDD_DDR_1V5
DSP_CVDD_DDR_1V5_PGD
DSP_DDR_EN_GND
+12V
GND
R824
NC
R45
0
R46
100K_5%
R47
2.87k_1%
C104
5n
C102
1u
C103
4.7u
C97
1u
C98
22u
C99
22u
C100
22u
C553
22u
C101
47u
C105
2.2n
C106
0.1n
R54
10_1%
R53
5.1_1%
R48
7.87k_1%
C109
2.2n
R49
1k_1%
R50
20.5k_1%
C107
680p
R51
49.9_1%
R261
13.3k_1%
R52
13.7k_1%
C110
47u
C111
47u
C112
100u
C113
100u
C114
100u
C115
100u
C554
100u
C116
1u
C117
1u
DSP_DVDD_DDR_1V5 1V@25A