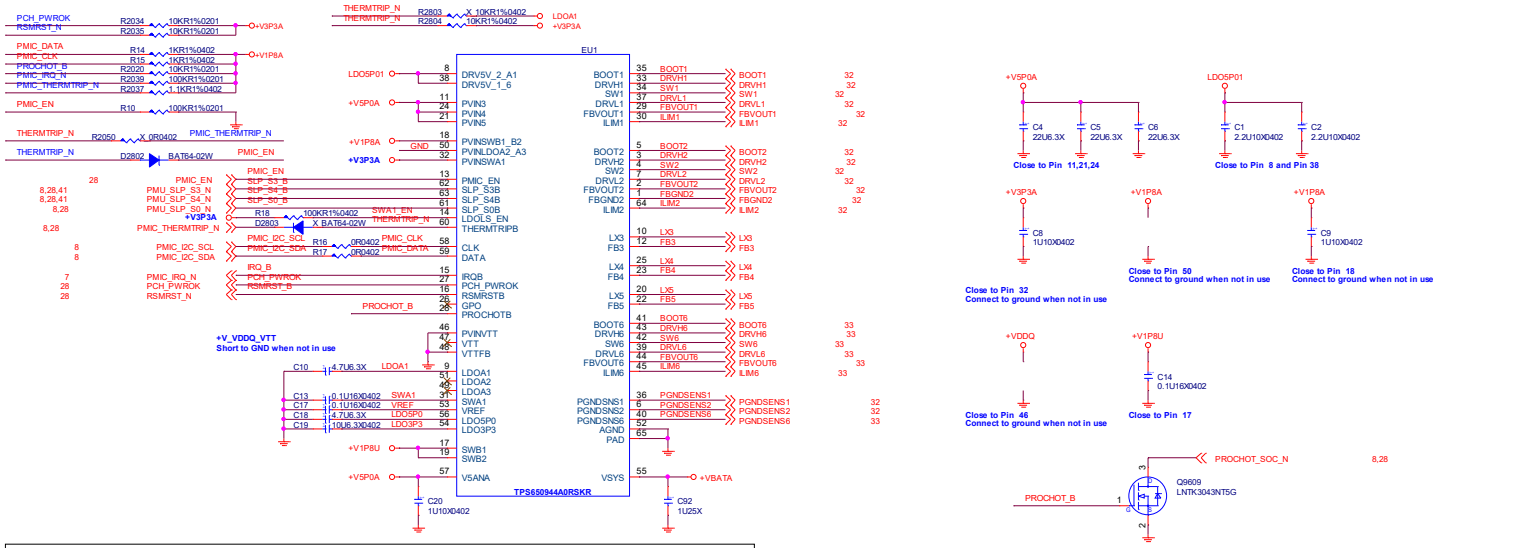

BUCK3
+V1P05S

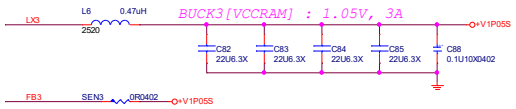

BUCK4
+V1P8A

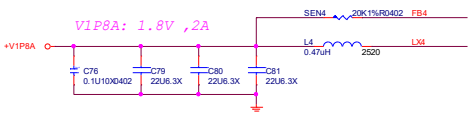

BUCK5
+V1P24A

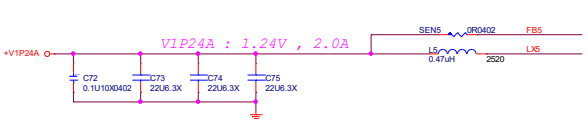

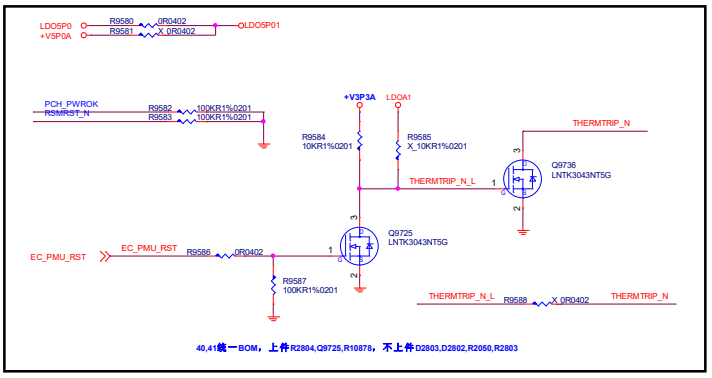

Shenzhen Ell Tech Co., Ltd.		REV 01
Size: A3	Project Name: A148J	
Design By	Document Number: 01 PMIC1	
Check By	Monday, November 08, 2021	Sheet: 31 of 42