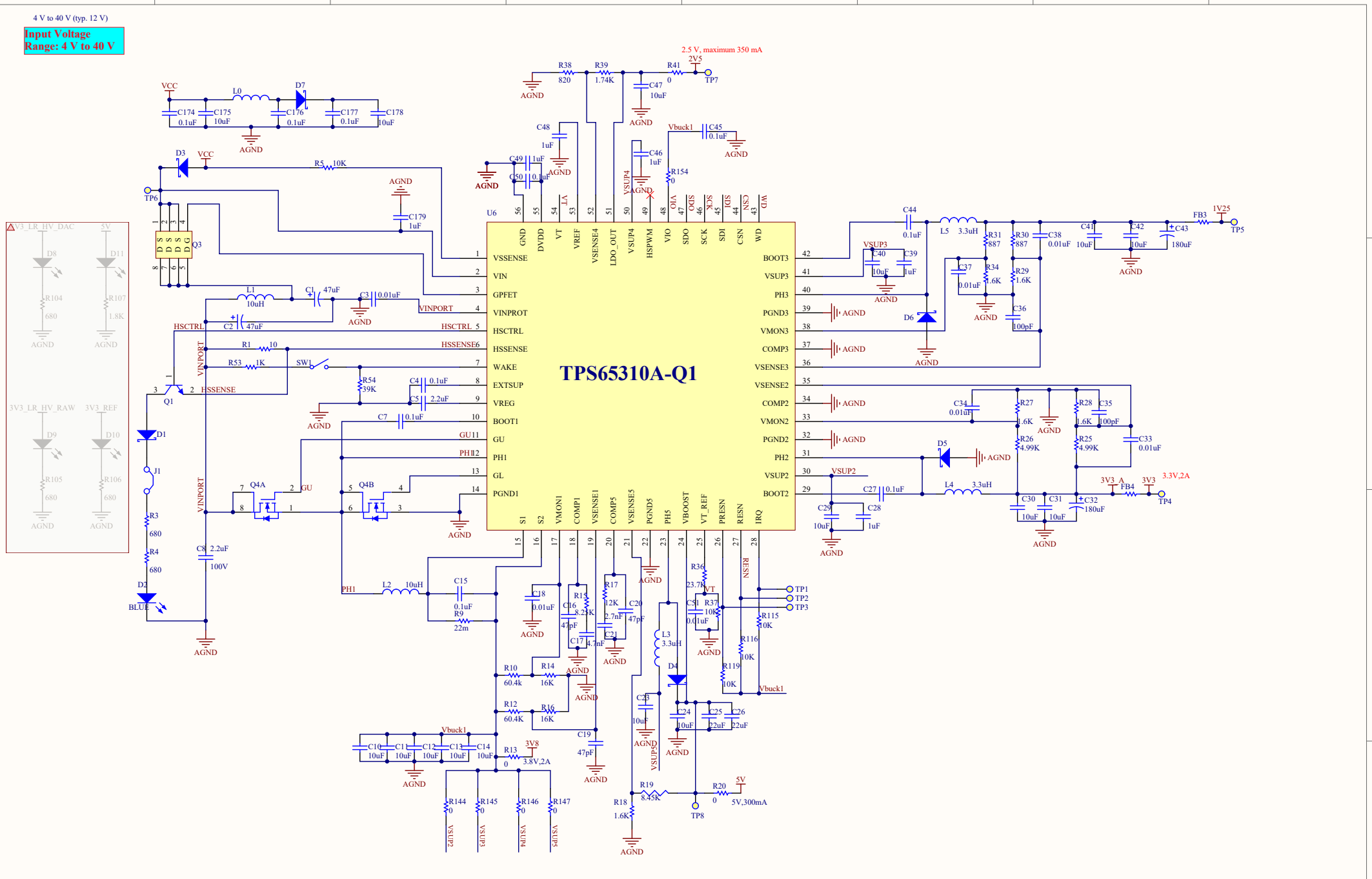
4 V to 40 V (typ. 12 V)
Input Voltage
Range: 4 V to 40 V
2.5 V, maximum 350 mA
TPS65310A-Q1
U6
VSSENSE
VIN
GPFET
VINPROT
HSCTRL
HSSENSE
WAKE
EXTSUP
VREG
BOOT1
GU
PH1
GL
PGND1
BOOT3
VSUP3
PH3
PGND3
VMON3
COMP3
VSENSE3
VSENSE2
COMP2
VMON2
PGND2
PH2
VSUP2
BOOT2
GND
DVDD
VT
VREF
VSENSE4
LDO_OUT
VSUP4
HSPWM
VIO
SDO
SCK
SDI
CSN
WD
S1
S2
VMON1
COMP1
VSENSE1
COMP5
VSENSE5
PGND5
PH5
VBOOST
VT_REF
PRESN
RESN
IRQ
3V3_LR_HV_DAC
5V
3V3_LR_HV_RAW
3V3_REF
BLUE
3.3V,2A
5V,300mA
3V8
3.8V,2A
Title
Size
A3
Number
Revision
Date: 2018/3/1
Sheet of
File: C:\Users\..\Power system.SchDoc
Drawn By: