THIS DOCUMENT AND THE DATA DISCLOSED HEREIN OR HEREWITH IS THE PROPERTY OF ALTIUM LIMITED AND MAY BE FREELY DISTRIBUTED IN WHOLE. NO RIGHTS ARE RESERVED OR EXPRESS OR IMPLIED WARANTEE GIVEN.

REVISION	DESCRIPTION	DATE	APPROVED

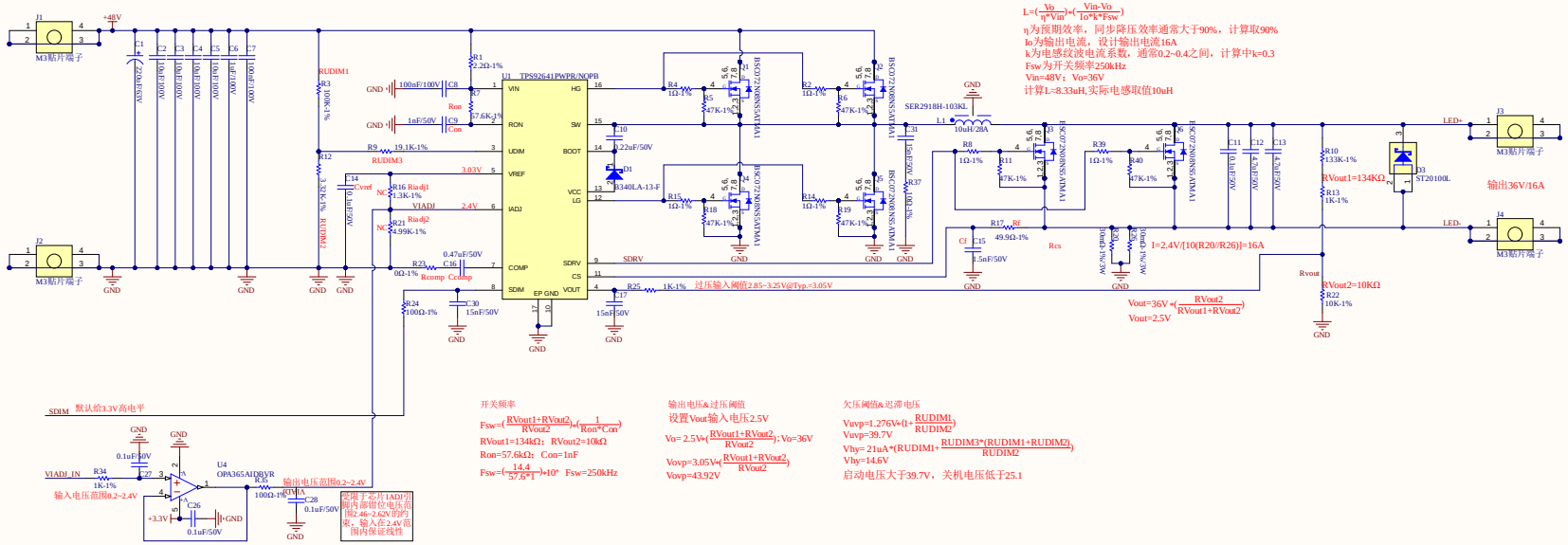

电感取值计算

$L=(\frac{Vo}{\eta*Vin})*(\frac{Vin-Vo}{Io*k*Fsw})$

η为预期效率，同步降压效率通常大于90%，计算取90%

Io为输出电流，设计输出电流16A

k为电感纹波电流系数，通常0.2~0.4之间，计算中k=0.3

Fsw为开关频率250kHz

Vin=48V；Vo=36V

计算L=8.33uH,实际电感取值10uH

开关频率

$Fsw=(\frac{RVout1+RVout2}{RVout2})*(\frac{1}{Ron*Con})$

RVout1=134kΩ；RVout2=10kΩ

Ron=57.6kΩ；Con=1nF

$Fsw=(\frac{14.4}{57.6*1})*10^6$ Fsw=250kHz

输出电压&过压阈值

设置Vout输入电压2.5V

$Vo=2.5V*(\frac{RVout1+RVout2}{RVout2})$; Vo=36V

$Vovp=3.05V*(\frac{RVout1+RVout2}{RVout2})$

Vovp=43.92V

欠压阈值&迟滞电压

$Vuvp=1.276V*(1+\frac{RUDIM1}{RUDIM2})$

Vuvp=39.7V

$Vhy=21uA*(RUDIM1+\frac{RUDIM3*(RUDIM1+RUDIM2)}{RUDIM2})$

Vhy=14.6V

启动电压大于39.7V，关机电压低于25.1

APPROVALS	DATE
ENG: *	
DSN: *	
CHK: *	
REFERENCE DOCUMENTS	
BOM:	
ASSY DWG:	
FAB DWG:	
PCB DWG:	

PROJECT: Altium

PROJECT REVISION: Not in version control | DOCUMENT REVISION: Not in version control | DESIGN ITEM REVISION: Not interpreted

TITLE: *

SIZE: A2 | CAGE CODE | DWG NO. | REV: ItemRevision not interp

SCALE: | FILE NAME: Sheet1.SchDoc | SHEET * OF