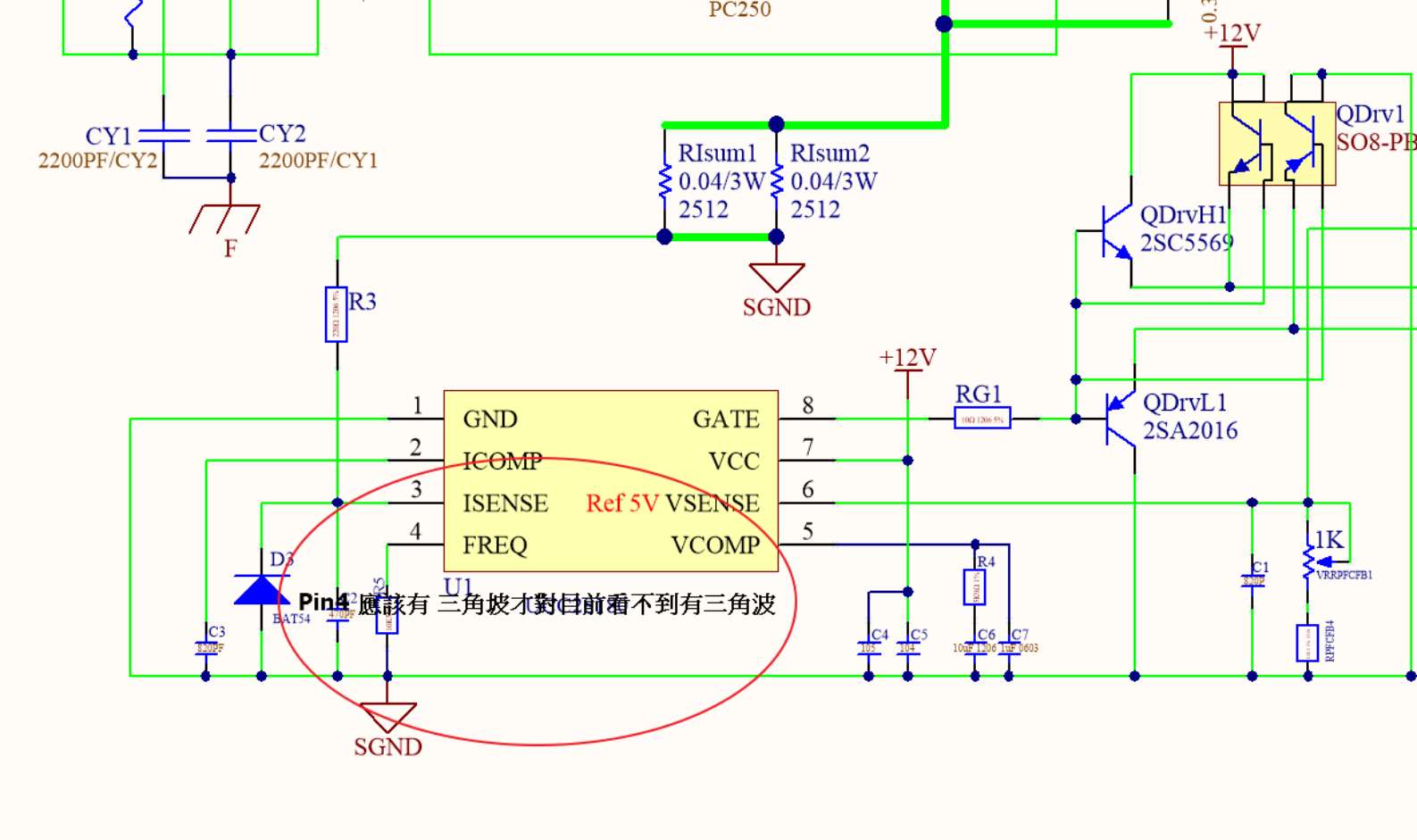
PC250
+12V
CY1
2200PF/CY2
CY2
2200PF/CY1
F
RIsum1
0.04/3W
2512
RIsum2
0.04/3W
2512
SGND
QDrv1
SO8-PB
QDrvH1
2SC5569
R3
+12V
RG1
QDrvL1
2SA2016
1
2
3
4
GND
ICOMP
ISENSE
FREQ
GATE
VCC
Ref 5V VSENSE
VCOMP
8
7
6
5
U1
D3
BAT54
Pin4 應該有 三角波才對目前看不到有三角波
C3
R4
C4
C5
C6
C7
C1
1K
VRRPFCFB1
RPFCFB4
SGND