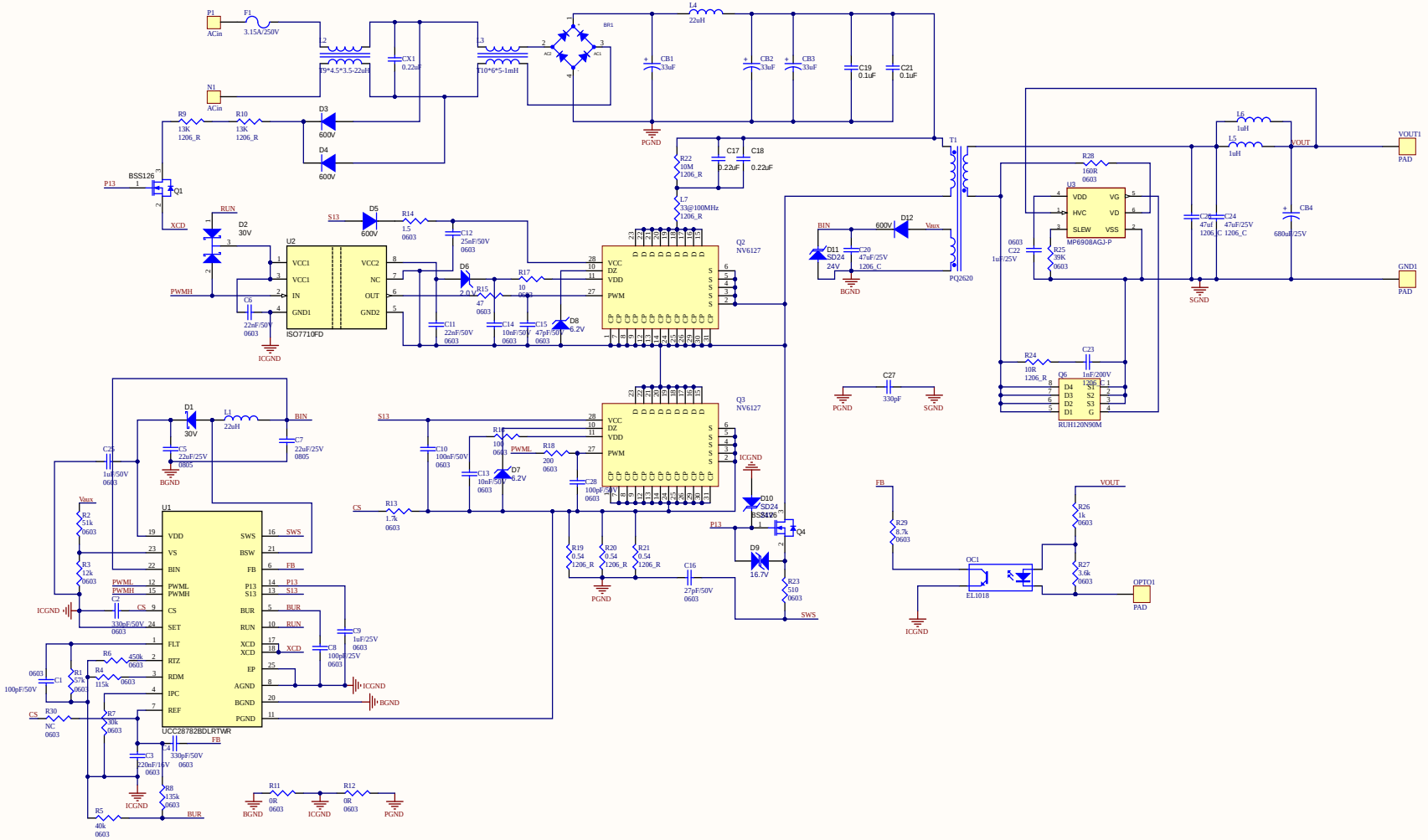

Title		
Size A2	Number	Revision
Date: 2/27/2024	Sheet of	
File: C:\Users\...\UCC28782_65W_V1.0.SchDoc	Drawn By:	