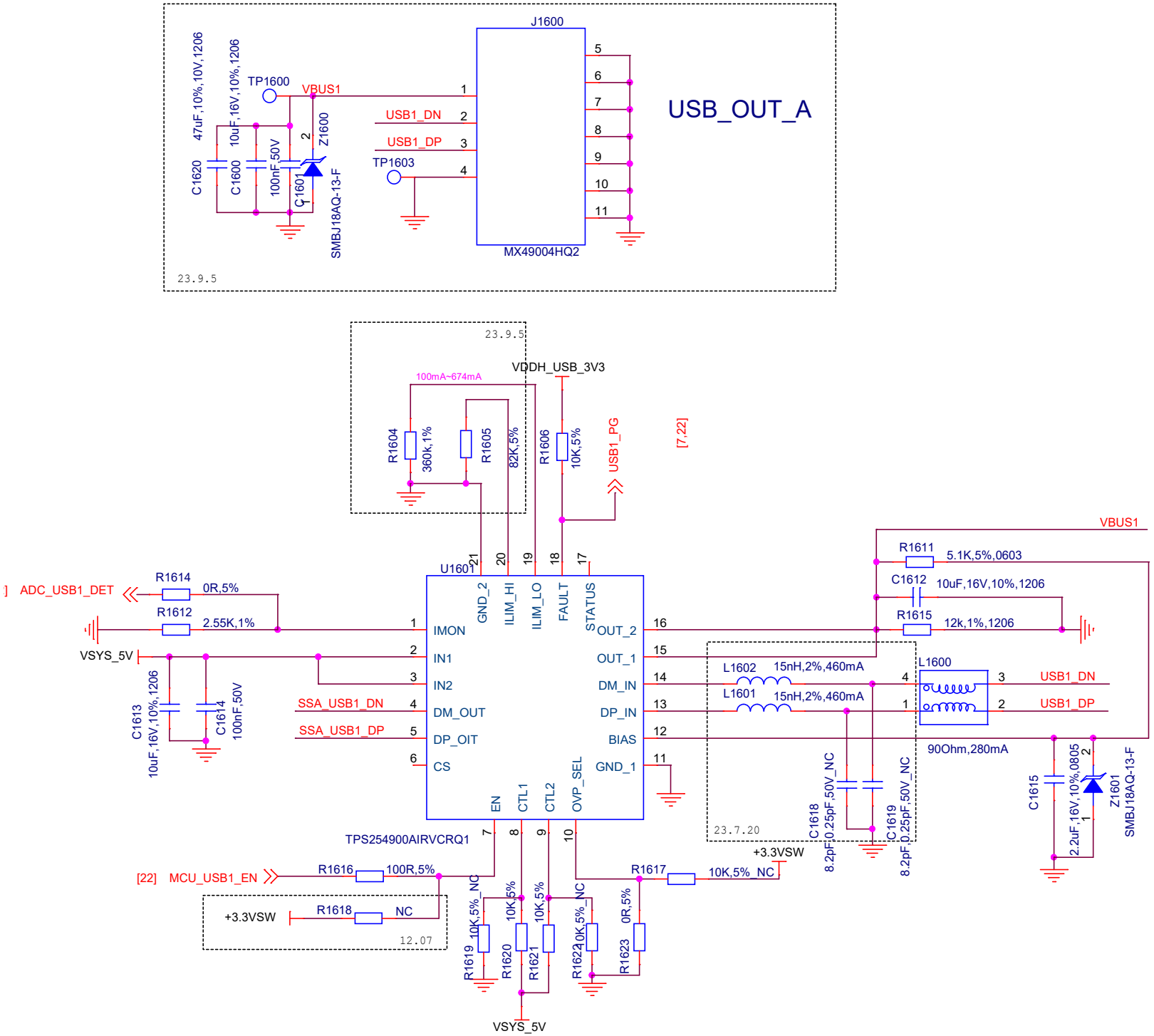
USB_OUT_A
J1600
MX49004HQ2
TP1600
TP1603
VBUS1
USB1_DN
USB1_DP
C1620
47uF,10%,10V,1206
C1600
10uF,16V,10%,1206
100nF,50V
C1601
Z1600
SMBJ18AQ-13-F
23.9.5
VDDH_USB_3V3
100mA~674mA
R1604
360k,1%
R1605
82K,5%
R1606
10K,5%
USB1_PG
[7,22]
U1601
TPS254900AIRVCRQ1
IMON
IN1
IN2
DM_OUT
DP_OIT
CS
GND_2
ILIM_HI
ILIM_LO
FAULT
STATUS
OUT_2
OUT_1
DM_IN
DP_IN
BIAS
GND_1
EN
CTL1
CTL2
OVP_SEL
] ADC_USB1_DET
R1614
0R,5%
R1612
2.55K,1%
VSYS_5V
C1613
10uF,16V,10%,1206
C1614
100nF,50V
SSA_USB1_DN
SSA_USB1_DP
[22] MCU_USB1_EN
R1616
100R,5%
+3.3VSW
R1618
NC
12.07
R1619
10K,5%_NC
R1620
10K,5%
R1621
10K,5%
R1622
10K,5%_NC
R1623
0R,5%
R1617
10K,5%_NC
VSYS_5V
R1611
5.1K,5%,0603
C1612
10uF,16V,10%,1206
R1615
12k,1%,1206
L1602
15nH,2%,460mA
L1601
15nH,2%,460mA
23.7.20
C1618
0.25pF,50V_NC
C1619
0.25pF,50V_NC
8.2pF
L1600
90Ohm,280mA
USB1_DN
USB1_DP
C1615
2.2uF,16V,10%,0805
Z1601
SMBJ18AQ-13-F