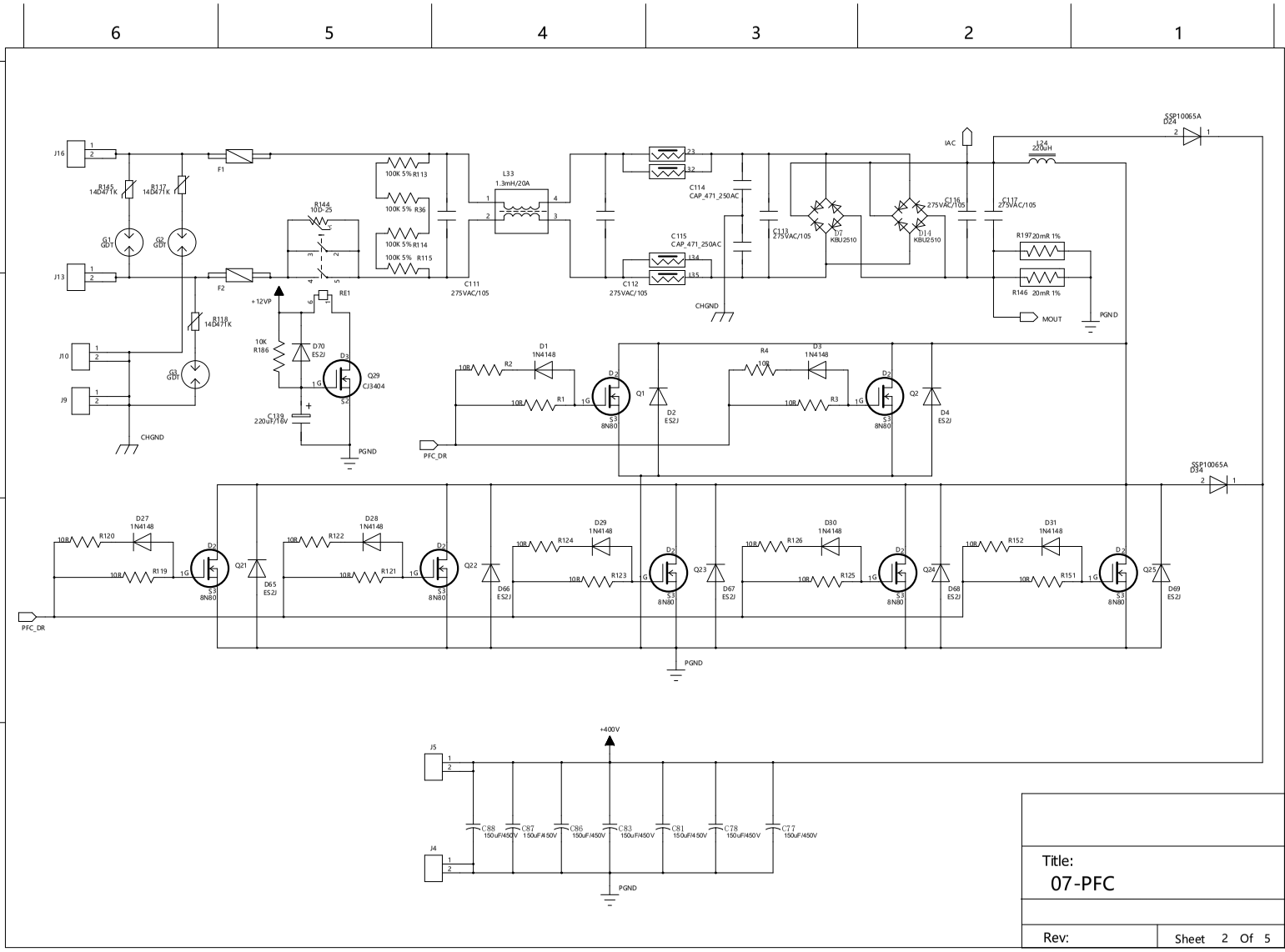

Title:
07-PFC

Rev:

Sheet 2 Of 5

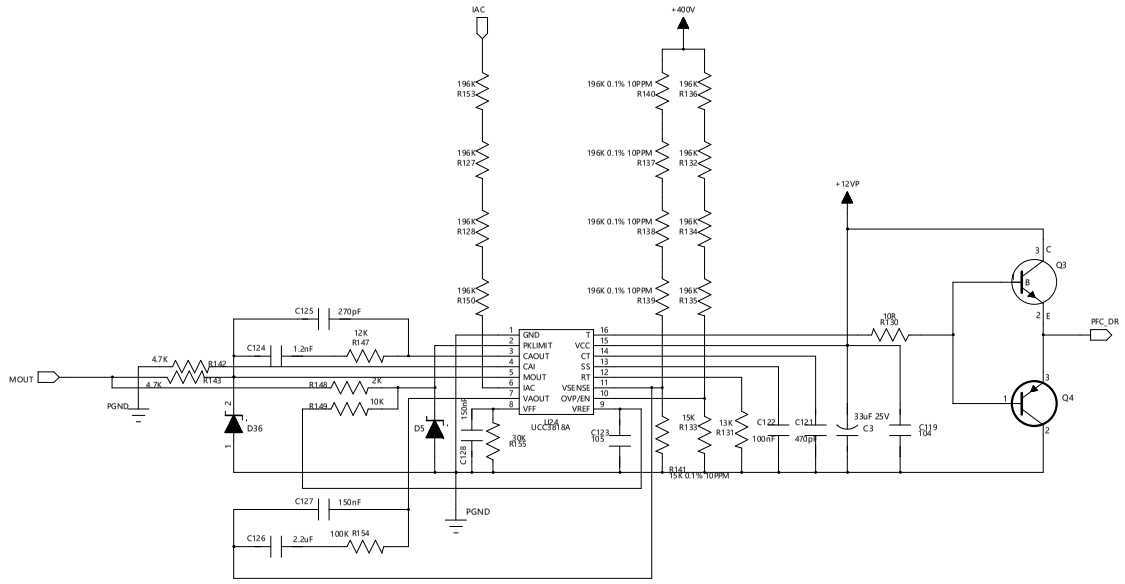

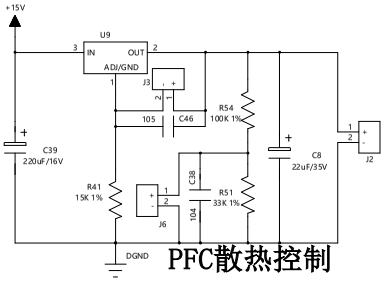

PFC散热控制

Title:
08-PFC_CONTRONIC

Rev:

Sheet 3 Of 5

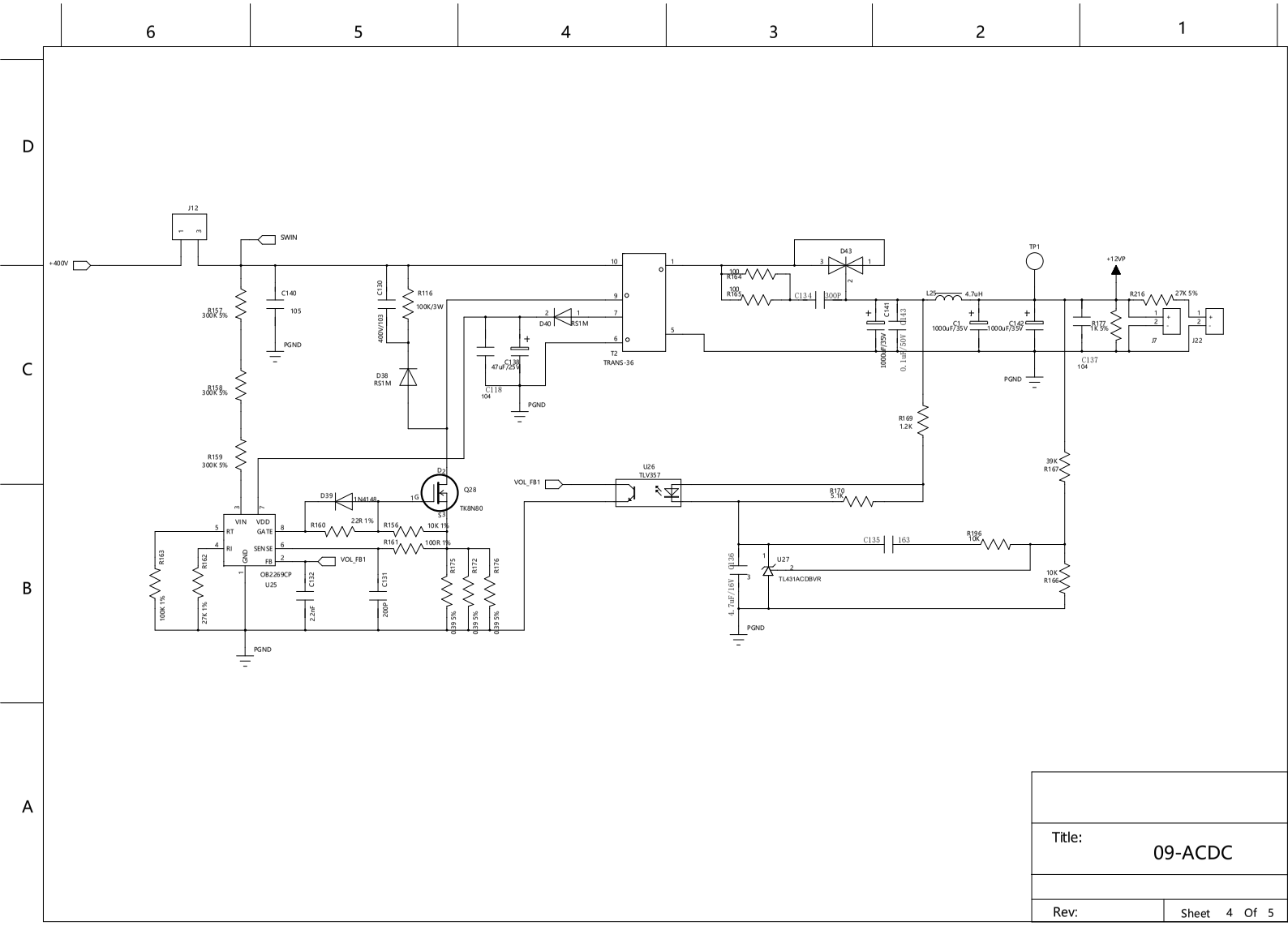

Title: 09-ACDC

Rev:

Sheet 4 Of 5

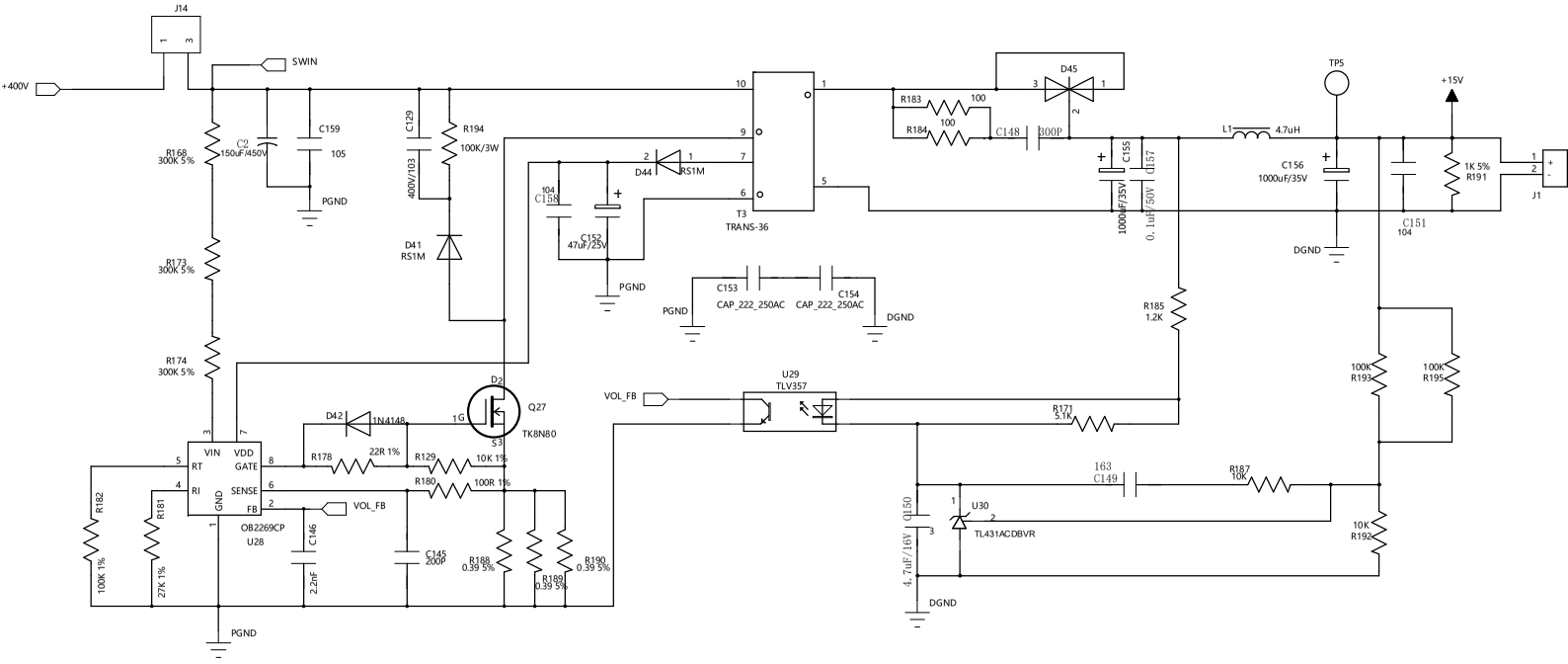
J14
+400V
SWIN
R168
300K 5%
C2
150uF/450V
C159
105
PGND
C129
400V/103
R194
100K/3W
D41
RS1M
R173
300K 5%
R174
300K 5%
D2
Q27
TK8N80
S3
D42
1N4148
1G
VIN
VDD
RT
GATE
RI
SENSE
GND
FB
OB2269CP
U28
R178
22R 1%
R129
10K 1%
R180
100R 1%
VOL_FB
C146
2.2nF
C145
200P
R188
0.39 5%
R189
0.39 5%
R190
0.39 5%
R182
100K 1%
R181
27K 1%
PGND
104
C158
C152
47uF/25V
PGND
D44
RS1M
T3
TRANS-36
C153
CAP_222_250AC
C154
CAP_222_250AC
PGND
DGND
R183
100
R184
100
C148
300P
D45
C155
1000uF/35V
C157
0.1uF/50V
L1
4.7uH
C156
1000uF/35V
DGND
TP5
+15V
C151
104
1K 5%
R191
J1
R185
1.2K
U29
TLV357
VOL_FB
R171
5.1K
163
C149
R187
10K
U30
TL431ACDBVR
C150
4.7uF/16V
DGND
100K
R193
100K
R195
10K
R192