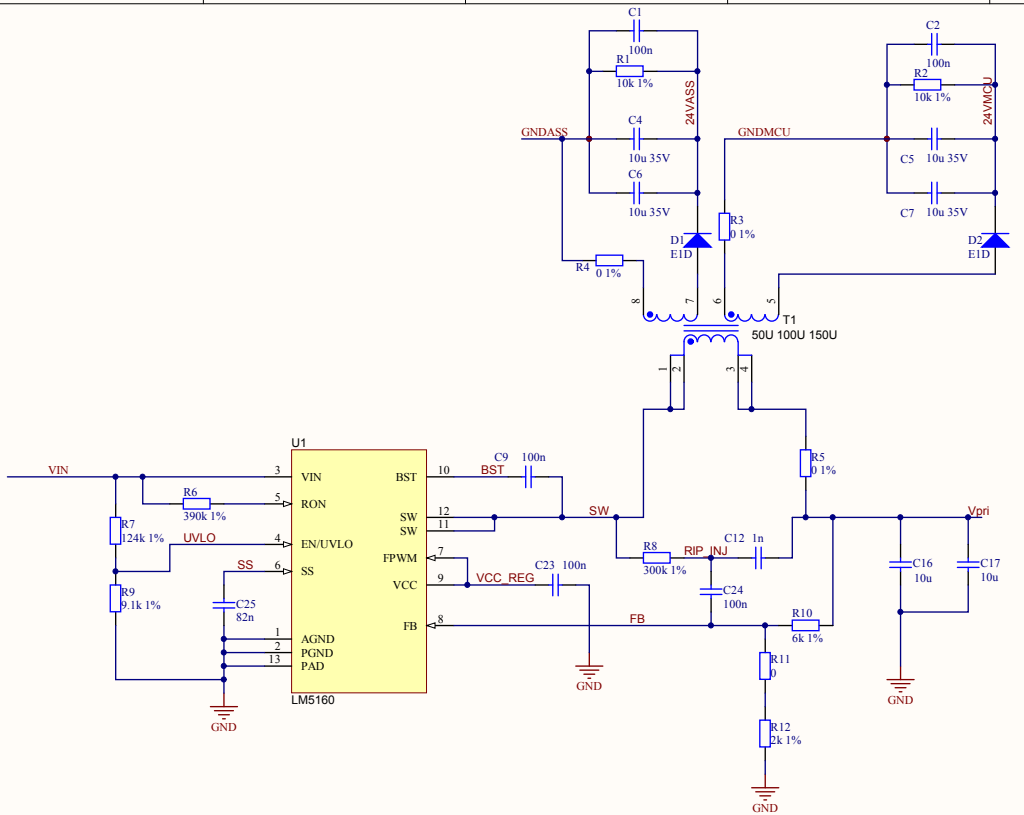

Title		
Size A3	Number	Revision
Date: 2018/4/1		Sheet of
File: E:\NDW5-1600\..\dianluzixun.SchDoc		Drawn By: