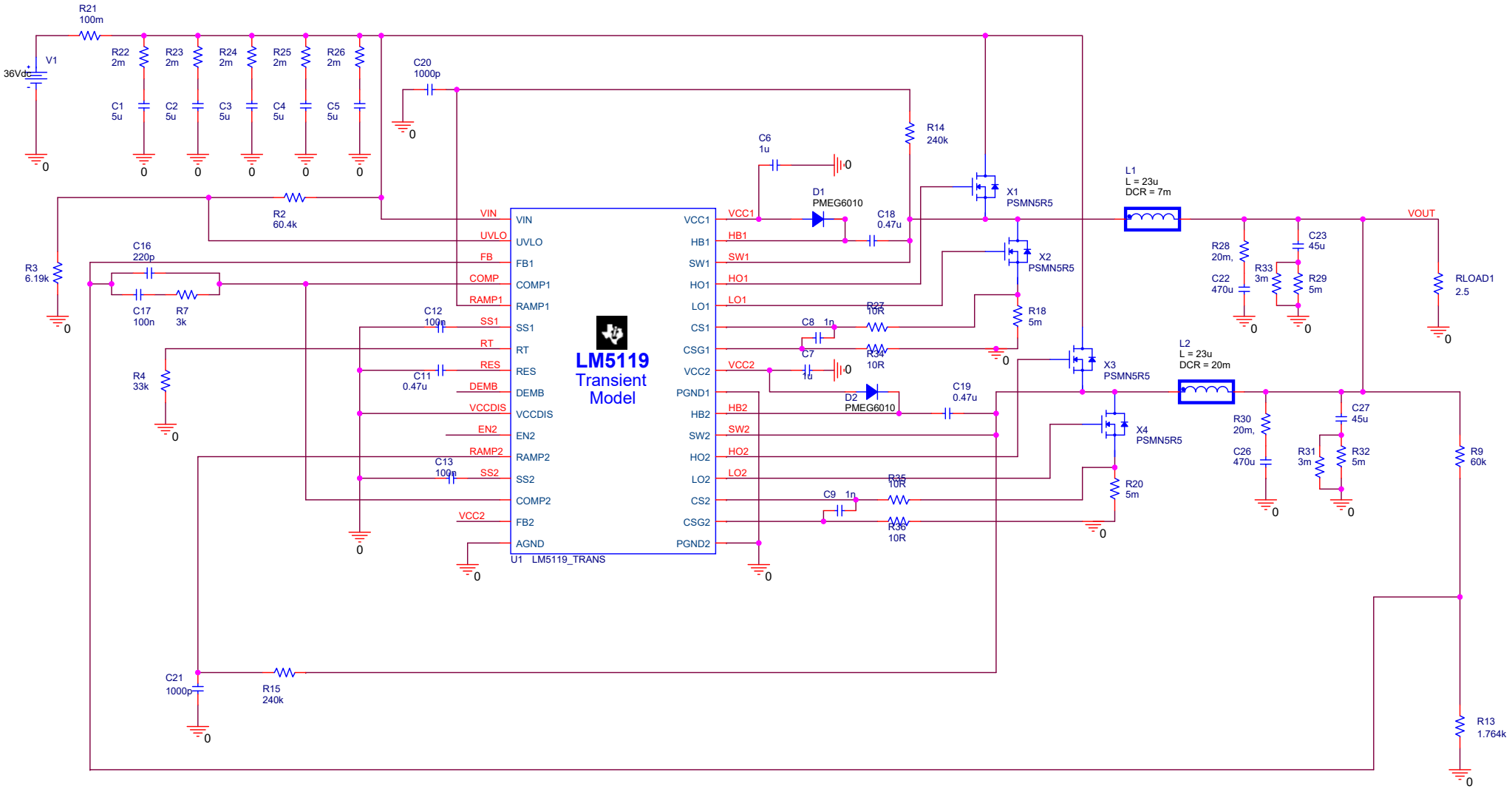
R21
100m
V1
36Vdc
R22
2m
R23
2m
R24
2m
R25
2m
R26
2m
C1
5u
C2
5u
C3
5u
C4
5u
C5
5u
C20
1000p
R14
240k
C6
1u
D1
PMEG6010
C18
0.47u
X1
PSMN5R5
L1
L = 23u
DCR = 7m
VOUT
R2
60.4k
R3
6.19k
C16
220p
C17
100n
R7
3k
VIN
UVLO
FB
COMP
RAMP1
SS1
RT
RES
DEMB
VCCDIS
EN2
RAMP2
SS2
COMP2
FB2
AGND
VCC1
HB1
SW1
HO1
LO1
CS1
CSG1
VCC2
PGND1
HB2
SW2
HO2
LO2
CS2
CSG2
PGND2
LM5119
Transient
Model
U1 LM5119_TRANS
X2
PSMN5R5
R27
10R
R18
5m
C8 1n
C7
1u
R34
10R
X3
PSMN5R5
L2
L = 23u
DCR = 20m
R28
20m,
C22
470u
R33
3m
C23
45u
R29
5m
RLOAD1
2.5
C12
100n
C11
0.47u
R4
33k
D2
PMEG6010
C19
0.47u
X4
PSMN5R5
R30
20m,
C26
470u
R31
3m
C27
45u
R32
5m
R9
60k
C13
100n
R35
10R
C9 1n
R36
10R
R20
5m
C21
1000p
R15
240k
R13
1.764k