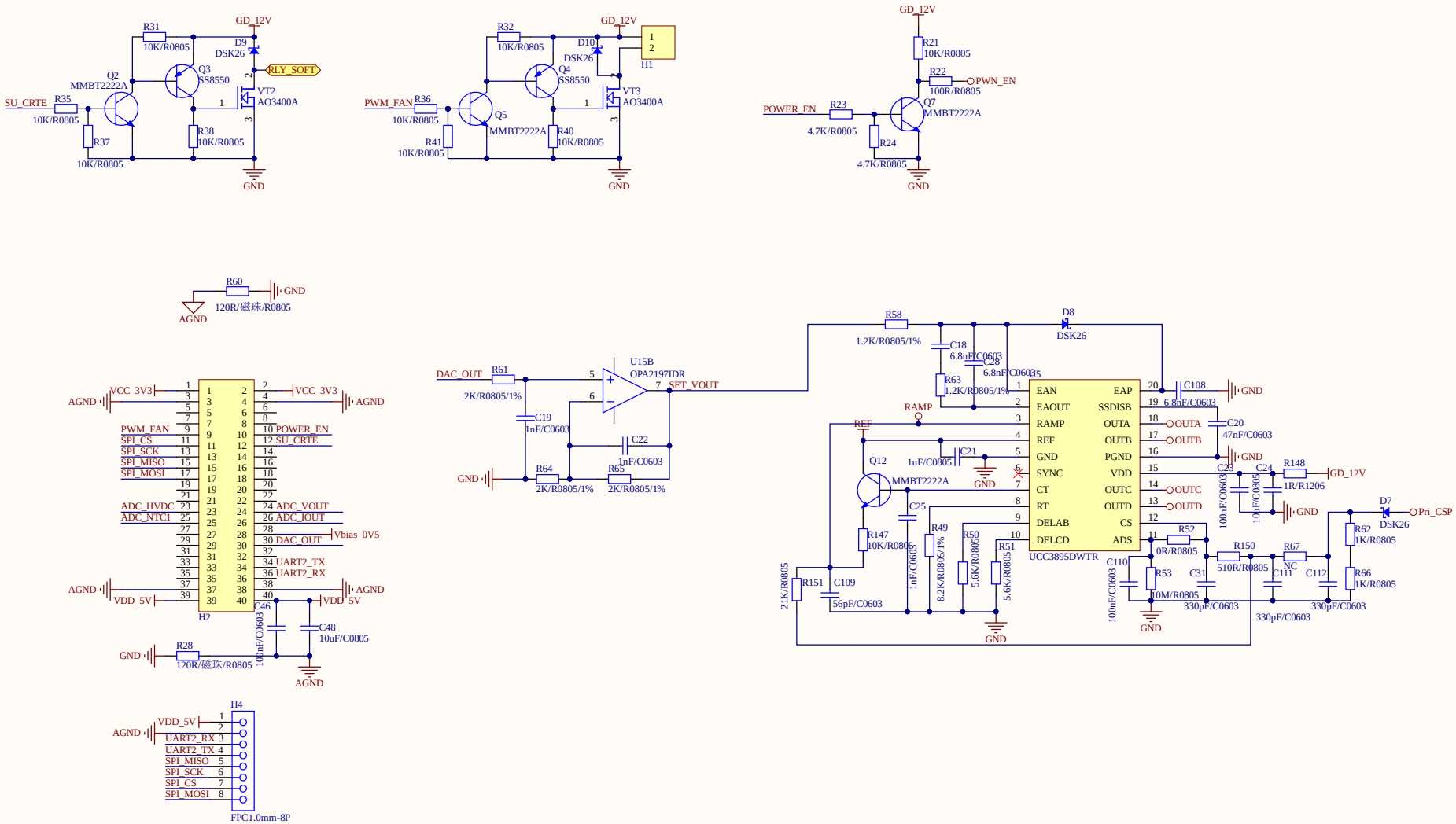
GD_12V
R31
10K/R0805
D9
DSK26
Q3
SS8550
RLY_SOFT
Q2
MMBT2222A
SU_CRTE
R35
10K/R0805
VT2
AO3400A
R37
10K/R0805
R38
10K/R0805
GND
R32
10K/R0805
D10
DSK26
Q4
SS8550
H1
PWM_FAN
R36
10K/R0805
Q5
MMBT2222A
R41
10K/R0805
R40
10K/R0805
VT3
AO3400A
R21
10K/R0805
R22
100R/R0805
PWN_EN
POWER_EN
R23
4.7K/R0805
Q7
MMBT2222A
R24
4.7K/R0805
R60
120R/磁珠/R0805
AGND
VCC_3V3
PWM_FAN
SPI_CS
SPI_SCK
SPI_MISO
SPI_MOSI
ADC_HVDC
ADC_NTC1
POWER_EN
SU_CRTE
ADC_VOUT
ADC_IOUT
Vbias_0V5
DAC_OUT
UART2_TX
UART2_RX
VDD_5V
H2
C46
10uF/C0603
C48
10uF/C0805
R28
120R/磁珠/R0805
DAC_OUT
R61
2K/R0805/1%
C19
1nF/C0603
U15B
OPA2197IDR
SET_VOUT
C22
1nF/C0603
R64
2K/R0805/1%
R65
2K/R0805/1%
R58
1.2K/R0805/1%
C18
6.8nF/C0603
C28
6.8nF/C0603
R63
1.2K/R0805/1%
D8
DSK26
RAMP
REF
Q12
MMBT2222A
C21
1uF/C0805
C25
R147
10K/R0805
R151
21K/R0805
C109
56pF/C0603
R49
8.2K/R0805/1%
R50
5.6K/R0805
R51
5.6K/R0805
1nF/C0603
UCC3895DWTR
EAN
EAOUT
RAMP
REF
GND
SYNC
CT
RT
DELAB
DELCD
EAP
SSDISB
OUTA
OUTB
PGND
VDD
OUTC
OUTD
CS
ADS
C108
6.8nF/C0603
C20
47nF/C0603
C23
100nF/C0603
C24
10uF/C0805
R148
1R/R1206
D7
DSK26
Pri_CSP
R52
0R/R0805
R150
510R/R0805
R67
NC
R62
1K/R0805
R66
1K/R0805
C110
100nF/C0603
R53
10M/R0805
C31
330pF/C0603
C111
330pF/C0603
C112
330pF/C0603
H4
FPC1.0mm-8P