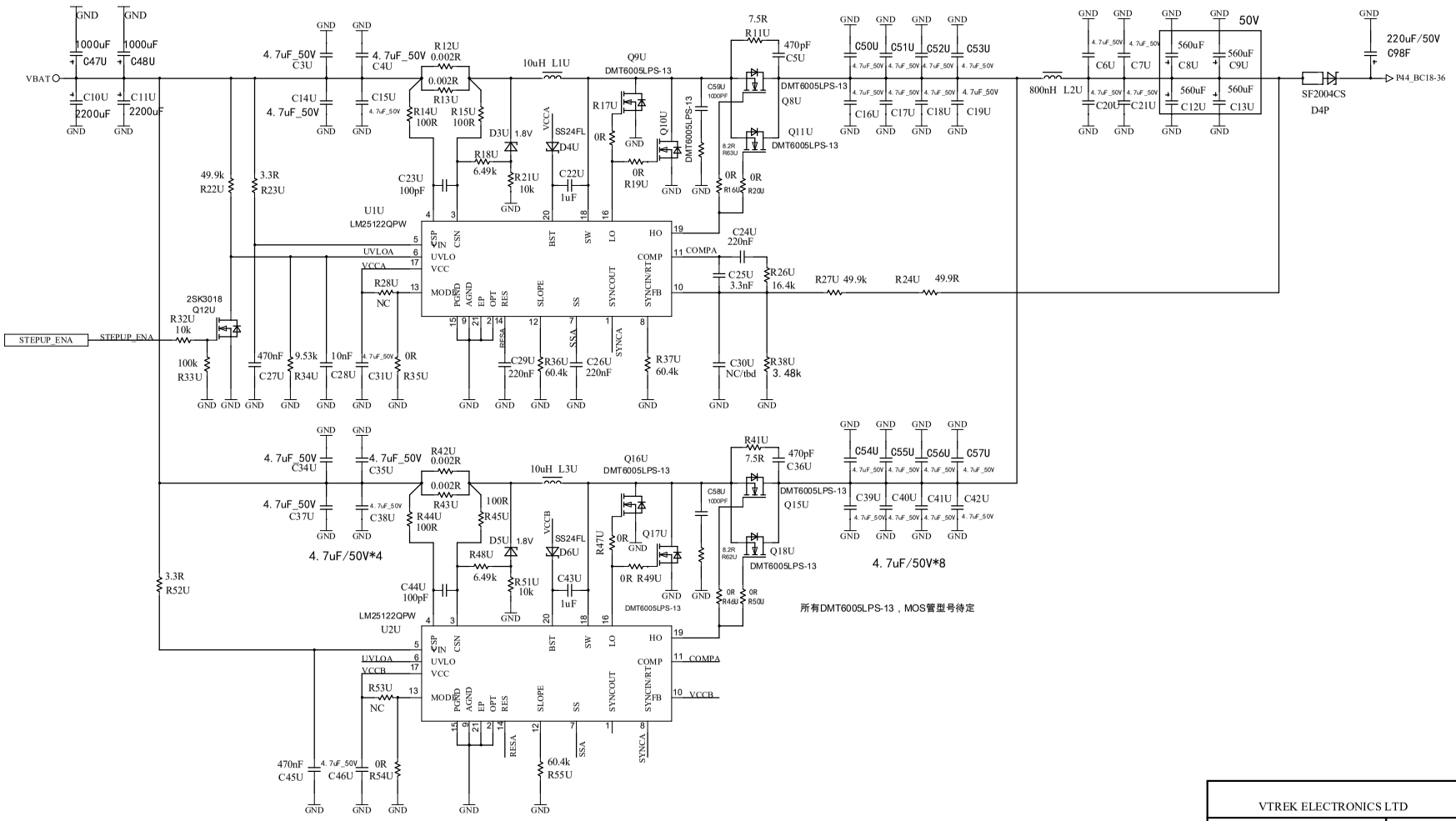

VTREK ELECTRONICS LTD			
DWG.: zouhaiqing	Title: PARTY Speaker		Sheet 4 of 4
CHK.:	Model No.: TVX943		Size: A3
APP.:	Drawing No.: BOOST	Rev:03	2022-4-28