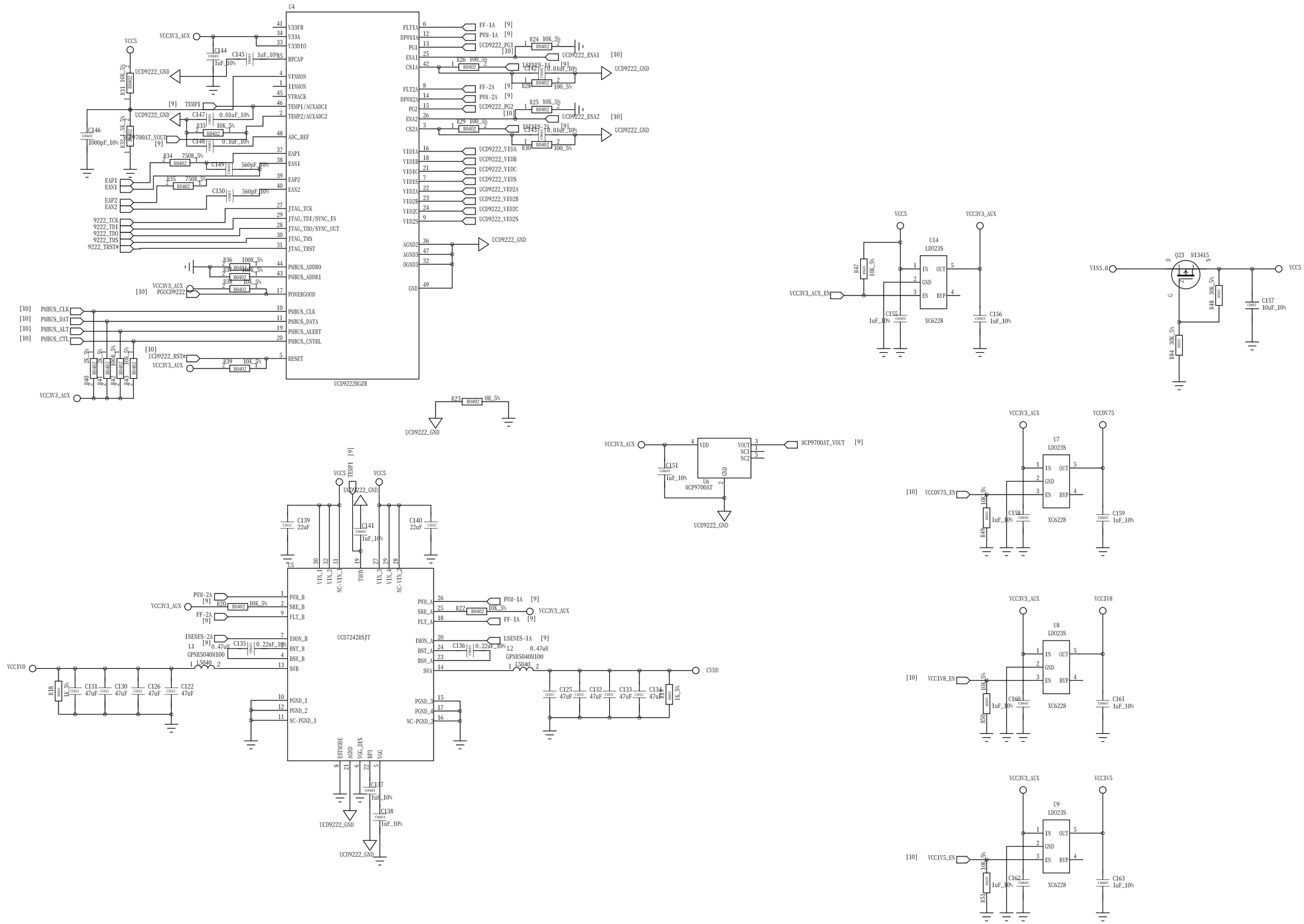
U4
UCD9222RGZR
VCC3V3_AUX
VCC5
C144 1uF_10%
C145 1uF_10%
R31 10K_5%
UCD9222_GND
TEMP1
C147 0.01uF_10%
R33 10K_5%
C146 1000pF_10%
R32 1.5K_5%
MCP9700AT_VOUT
C148 0.1uF_10%
R34 750R_5%
C149 560pF_10%
R35 750R_5%
C150 560pF_10%
EAP1
EAN1
EAP2
EAN2
9222_TCK
9222_TDI
9222_TDO
9222_TMS
9222_TRST#
R36 100K_5%
R37 100K_5%
R38 10K_5%
VCC3V3_AUX
PGUCD9222
PMBUS_CLK
PMBUS_DAT
PMBUS_ALT
PMBUS_CTL
R40 2K_5%
R41 10K_5%
R42 10K_5%
R43 10K_5%
UCD9222_RST#
R39 10K_5%
FLT1A
DPWM1A
PG1
ENA1
CS1A
FF-1A
PWM-1A
UCD9222_PG1
UCD9222_ENA1
R24 10K_5%
R26 100_5%
LSENES-1A
C142 0.01uF_10%
R28 100_5%
FLT2A
DPWM2A
PG2
ENA2
CS2A
FF-2A
PWM-2A
UCD9222_PG2
UCD9222_ENA2
R25 10K_5%
R29 100_5%
LSENES-2A
C143 0.01uF_10%
R30 100_5%
VID1A
VID1B
VID1C
VID1S
VID2A
VID2B
VID2C
VID2S
UCD9222_VIDA
UCD9222_VIDB
UCD9222_VIDC
UCD9222_VIDS
UCD9222_VID2A
UCD9222_VID2B
UCD9222_VID2C
UCD9222_VID2S
AGND2
AGND3
DGND3
GND
R23 0R_5%
U14
LD023S
XC6228
R47 10K_5%
VCC3V3_AUX_EN
C155 1uF_10%
C156 1uF_10%
VIN5.0
Q23 MI3415
R48 30K_5%
R84 30K_5%
C157 10uF_10%
U7
LD023S
VCC0V75
VCC0V75_EN
R49 10K_5%
C158 1uF_10%
C159 1uF_10%
U8
LD023S
VCC1V8
VCC1V8_EN
R50 10K_5%
C160 1uF_10%
C161 1uF_10%
U9
LD023S
VCC1V5
VCC1V5_EN
R51 10K_5%
C162 1uF_10%
C163 1uF_10%
U6
MCP9700AT
C151 1uF_10%
MCP9700AT_VOUT
U5
UCD7242RSJT
C139 22uF
C140 22uF
C141 1uF_10%
VIN_1
VIN_2
NC-VIN_1
TMON
VIN_3
VIN_4
NC-VIN_2
PWM_B
SRE_B
FLT_B
IMON_B
BST_B
BSW_B
SWB
PGND_1
PGND_2
NC-PGND_1
PWM_A
SRE_A
FLT_A
IMON_A
BST_A
BSW_A
SWA
PGND_3
PGND_4
NC-PGND_2
ESTMODE
AGND
VGG_DIS
BP3
VGG
PWM-2A
FF-2A
R20 10K_5%
ISENES-2A
C135 0.22uF_10%
L1 0.47uH
GPNR5040M100
L5040
VCC1V0
R18 1K_5%
C131 47uF
C130 47uF
C126 47uF
C122 47uF
PWM-1A
R22 10K_5%
FF-1A
LSENES-1A
C136 0.22uF_10%
L2 0.47uH
CVDD
C125 47uF
C132 47uF
C133 47uF
C134 47uF
R50 1K_5%
C137 1uF_10%
C138 1uF_10%