LED Driver Circuit

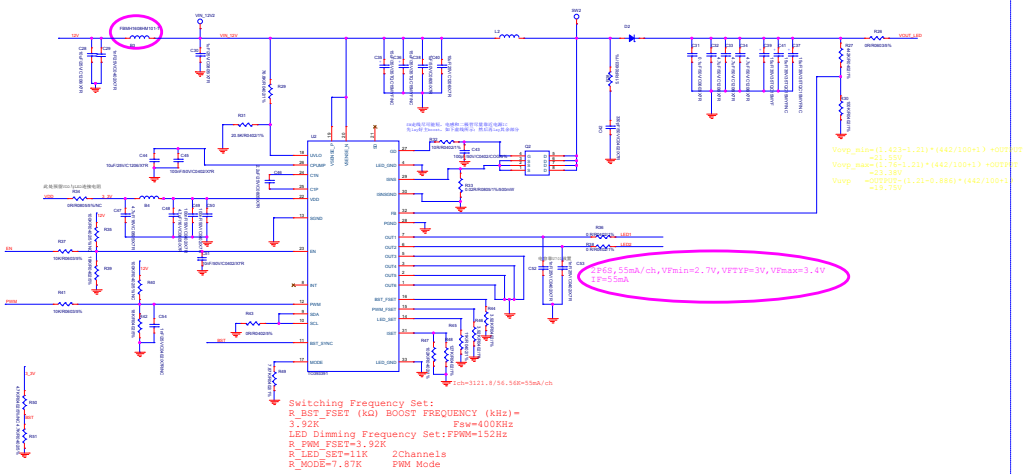

Title			
Size	Document Number		Rev
B	<Doc>		<Rev_Code>
Date: Wednesday, March 16, 2022	Sheet 1 of 2		