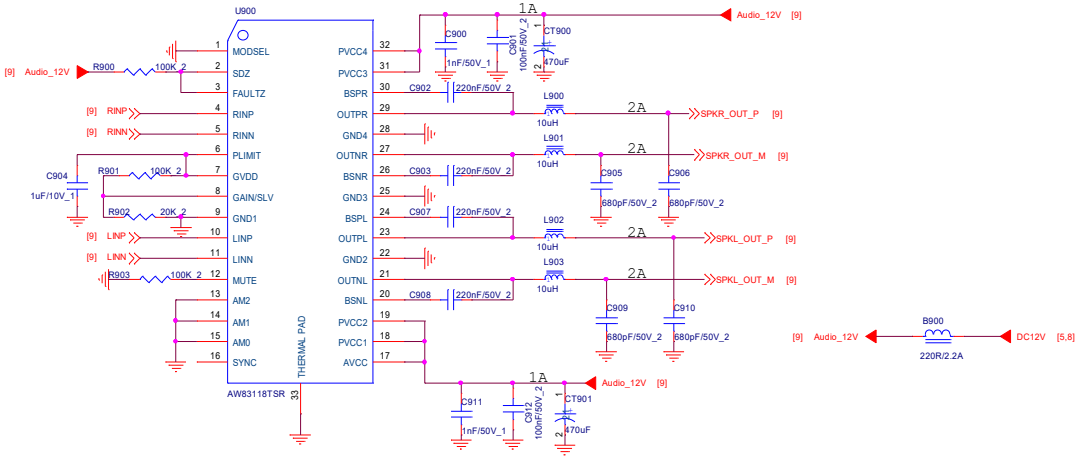

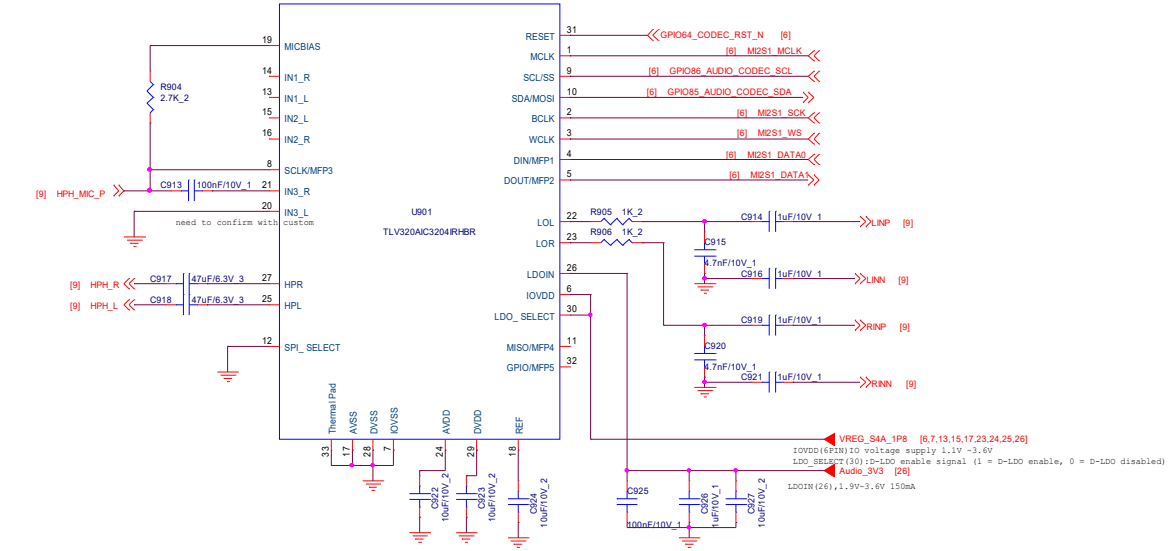

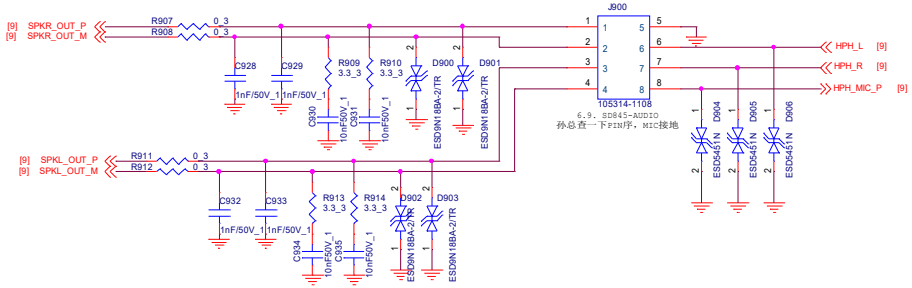

<Variant Name>

Thundercomm AIOT ENABLER	Designer	Wudingming	
	Approve	Caojingwei	
Title	Audio		
Size C	Document Number Sweeper-IO_board		Rev V01
Date: Thursday, May 13, 2021	Sheet 9 of 28		